BST | A RELIABLE TESTING FOR TRUST

GLOBAL TESTING AND CERTIFICATION PRECISION SERVICE CLOUD FACTORY

EC-RED Certificate

Certificate NO. : BSTDG1611656400001EC-1

Applicant : **ENJOY TECHNOLOGY CO., LIMITED**
UNIT 04, 7/F BRIGHT WAY TOWER NO.33 MONG KOK RD KL

Manufacturer : **GUANGZHOU QILE TECHNOLOGY CO., LTD**
3/F and 4/F, 3#, Nanbian street, Dayuan Nan Road, Baiyun District, Guangzhou, Guangdong Province, China

Product Name : **AUDIENCE RESPONSE SYSTEM**

Trade Name : Quiz
ENJOY TECH

Main Test Model : **217**
Additional Model : **218, 219, 207, 237, 238, 317, 319, 419, 229, RF219 VoteWorks Engage**

Essential requirement		Applied Specifications/Standards	Documentary Evidence	Result
Art.3.1(a)	Safety	EN 60950-1:2006+A11:2009+A1:2010 +A12:2011+A2:2013	BSTDG1611656400001SR-2	Pass
Art.3.1(b)	EMC	ETSI EN 301 489-3 V1.6.1:2013 ETSI EN 301 489-1 V1.9.2:2011	BSTDG1611656400001ER-1	Pass
Art.3.2	Radio	ETSI EN 300 440-2 V1.4.1:2010 ETSI EN 300 440-1 V1.6.1:2010	BSTDG1611656400001ER-7	Pass

The EUT described above has been tested by us with the listed standards and found in compliance with the council RED directive 2014/53/EU. It is possible to use CE marking to demonstrate the compliance with this Directive.
The scope of evaluation relates to the submitted documents only.

CE

SHENZHEN BST TECHNOLOGY CO.,LTD. APPROVED

Christina Deng
Manager
Sep. 23, 2016

Shenzhen BST Technology Co.,Ltd.
Add: Building No.23-24, Zhiheng Industrial Park, Guankouer Road, Nantou,Nanshan District,Shenzhen,Guangdong,China
Certificate Search: http://www.bst-lab.com, Tel:400-882-9628, 8009990305, E-mail:christina@bst-lab.com

TST Testing Technology

Certificate Of Compliance

Certificate No.	:	BSTDG1611725800001EC-1
Applicant	:	ENJOY TECHNOLOGY CO., LIMTED UNIT 04, 7/F BRIGHT WAY TOWER NO.33 MONG KOK RD KL
Manufacturer	:	GUANGZHOU QILE TECHNOLOGY CO., LTD 4/F and 4/F.3#. Nanbian street. Dayuan Nan Road. Baiyun Distric Guangzhou, Guangdong Province, China
Trade Name	:	ENJOY
Product	:	AUDIENCE RESPONSE SYSTEM
MainTest Model	:	217
Additional Model	:	218,219,207,237,238,317,319,419,229, RF219 VoteWorks Engage

The EUT described above has been consolidated by us and found in compliance with the council RoHS 2.0 Directive (EU) 2015/863 amending Annex II to Directive 2011/65/EU.
The certiticate applies to the tested sample above mentioned only and shall not imply an assessment of the whole produstion.It is only valid in connection with the test repot number. TST2018060119-3RR

Approved by:Andy Zheng

TST TECHNOLOGY CO., LTD. APPROVED

Manager
Jun.07,2018

RoHS

TST Testing Technology Co., Ltd
2F Yinhe Building, Hetian Road,Houjie Town, Dongguan, Guangdong, China
Tel: 86-0769-85088050 Fax: 86-0769-85088450 E-mail:tst@tst-test.com http://www.tst-test.com

ENJOY TECHNOLOGY CO., LIMITED

CE RADIO TEST REPORT

Prepared For :	ENJOY TECHNOLOGY CO., LIMITED UNIT 04, 7/F BRIGHT WAY TOWER NO.33 MONG KOK RD KL
Product Name:	AUDIENCE RESPONSE SYSTEM
Trade Name:	Quiz ENJOY TECH
Model :	217, 218, 219, 207, 237, 238, 317, 319, 419, 229, RF219 VoteWorks Engage
Prepared By :	Shenzhen BST Technology Co., Ltd. Building No.23-24, Zhiheng Industrial Park, Guankouer Road, Nantou,Nanshan District,Shenzhen,Guangdong,China
Test Date:	Sep. 21-23, 2016
Date of Report :	Sep. 23, 2016
Report No.:	BSTDG1611656400001ER-7

TABLE OF CONTENT

Description Page

Test Report Declaration

1. GENERAL INFORMATION 6
1.1. Description of Device (EUT) 6
1.2. Test Facility 7
1.3. Test Uncertainty 7
2. TEST RESULTS SUMMARY 8
3. PRODUCT DESCRIPTION 9
3.1. EUT Description 9
3.2. Block Diagram of EUT Configuration 9
3.3. Operating Condition of EUT 9
3.4. Test Conditions 9
3.5. Modifications 9
3.6. Abbreviations 10
4. TEST INSTRUMENT USED 11
5. EQUIVALENT ISOTROPICALLY RADIATED POWER 12
5.1 LIMIT 12
5.2 TEST CONFIGURATION 13
5.3 TEST PROCEDURE 14
5.4 TEST RESULTS 15
6. PERMITTED RANGE OF OPERATING FREQUENCIES 16
6.1 LIMIT 16
6.2 TEST CONFIGURATION 16
6.3 TEST PROCEDURE 16
6.4 TEST RESULTS 17
7. SPURIOUS EMISSIONS 18
7.1 LIMIT 18
7.2 TEST CONFIGURATION 18
7.3 TEST PROCEDURE 18

7.4 TEST RESULTS 19
8. DUTY CYCLE 20
8.1 LIMIT 20
8.2 TEST CONFIGURATION 20
8.3 TEST PROCEDURE 20
8.4 TEST RESULTS 20
9. SPURIOUS RADIATION 21
12.1 ..... LIMIT 21
12.2 ..... TEST CONFIGURATION 21
12.3 ..... TEST PROCEDURE 21
12.4 ..... TEST RESULTS 22

TEST REPORT DECLARATION

Applicant	:	ENJOY TECHNOLOGY CO., LIMITED
Manufacturer	:	GUANGZHOU QILE TECHNOLOGY CO., LTD
EUT Description	:	AUDIENCE RESPONSE SYSTEM
MODEL NO	:	217, 218, 219, 207, 237, 238, 317, 319, 419, 229, RF219 VoteWorks Engage (Note: The series products have the same circuit diagram, PCB layout and functionality. The differences are the model name and appearance, so, we select 217 to test.)

(A) SERIAL NO. : N/A

(B) Remark : N/A

Test Procedure Used:

ETSI EN300 440-2 V1.4.1:2010

ETSI EN300 440-1 V1.6.1:2010

The device described above is tested by us to determine the maximum emission levels emanating from the device, the severe levels which the device can endure and EUT's performance criterion. The test results are contained in this test report. Shenzhen BST Technology Co., Ltd. .is assumed of full responsibility for the accuracy and completeness of these tests. Also, this report shows that the EUT is technically compliant with the **2014/53/EU** requirements.

This report applies to above tested sample only and shall not be reproduced in part without written approval of Shenzhen BST Technology Co., Ltd.

Prepared by :	Grace Assistant
Tested by:	Jane.zhu Test Engineer
Reviewer :	Diy Supervisor
Approved & Authorized Signer :	SHENZHEN BST TECHNOLOGY CO.,LTD APPROVED Andrew. Shu / Manager

1. GENERAL INFORMATION

1.1. Description of Device (EUT)

Description	:	AUDIENCE RESPONSE SYSTEM
Model Number	:	217, 218, 219, 207, 237, 238, 317, 319, 419, 229, RF219 VoteWorks Engage
Applicant	:	ENJOY TECHNOLOGY CO., LIMITED UNIT 04, 7/F BRIGHT WAY TOWER NO.33 MONG KOK RD KL
Manufacturer	:	GUANGZHOU QILE TECHNOLOGY CO., LTD 3/F and 4/F, 3#, Nanbian street, Dayuan Nan Road, Baiyun District, Guangzhou, Guangdong Province, China
Date of Test	:	Sep. 21-23,2016

1.2. Test Facility

Site Description

EMC Lab.	:	Certificated by TUV,TIMCO
Name of Firm	:	Shenzhen BST Technology Co.,Ltd.
Site Location	:	Building No.23-24, Zhiheng Industrial Park, Guankouer Road, Nantou,Nanshan District,Shenzhen,Guangdong,China

1.3. Test Uncertainty

Conducted Emission Uncertainty	=	±2.66dB
Radiated Emission Uncertainty	=	±4.26dB

2. TEST RESULTS SUMMARY

Table Test Results Summary

Test Items	Test Results
EQUIVALENT ISOTROPICALLY RADIATED POWER	Pass
PERMITTED RANGE OF OPERATING FREQUENCIES	Pass
SPURIOUS EMISSIONS	Pass
DUTY CYCLE	Pass
SPURIOUS RADIATION	Pass

Remark: “N/A” means “Not applicable.”

3. PRODUCT DESCRIPTION

3.1. EUT Description

Description : AUDIENCE RESPONSE SYSTEM

Applicant : ENJOY TECHNOLOGY CO., LIMITED

3.2. Block Diagram of EUT Configuration

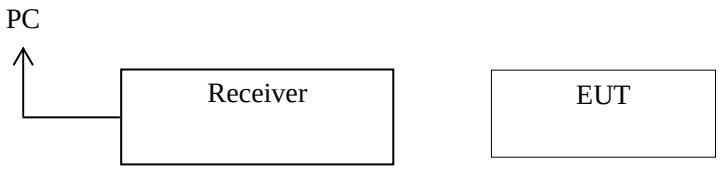

Figure For EUT SETUP

3.3. Operating Condition of EUT

Test mode 1: TX; Test mode 1: RX

3.4. Test Conditions

Temperature: 24-25℃

Relative Humidity: 65-66 %

3.5. Modifications

No modification was made.

3.6. Abbreviations

EUT	Equipment Under Test
FM	Frequency Modulation
AF	Audio Frequency
N/A	Not Applicable
CD	Compact Disc
DVD	Digital Video Disc
VCD	Video Compact Disc
EMC	Electromagnetic Compatibility
AM	Amplitude Modulation
AC/DC	Alternate Current/Direct Current
LW, MW and SW	Long Wave, Medium Wave and Short Wave
RF	Radio Frequency
TV	Color Television
e.m.f.	Electro-motive-force
EMI	Electromagnetic Interference
EMS	Electromagnetic Susceptibility

4. TEST INSTRUMENT USED

Name of Equipment	Manufacturer	Model	Serial Number	Calibration Due
Receiver	Rohde&Schwarz	ESI26	100009	11/05/2016
Climate Chamber	ESPEC	EL-10KA	05107008	11/05/2016
Communication Test Set	HP	HP8920B	US35010135	11/05/2016
Signal Generator	Rohde&Schwarz	SMT03	100059	11/05/2016
Signal Generato	IFR	2023A	202304/060	11/05/2016
Climate Chamber	ESPEC	EL-10KA	05107008	11/05/2016
ULTRA-BROADBAND ANTENNA	ROHDE & SCHWARZ	HL562	100015	11/05/2016
EMI TEST RECEIVER	ROHDE & SCHWARZ	ESI 26	100009	11/05/2016
RF TEST PANEL	ROHDE & SCHWARZ	TS / RSP	335015/ 0017	N/A
TURNTABLE	ETS	2088	2149	N/A
ANTENNA MAST	ETS	2075	2346	N/A
EMI TEST SOFTWARE	ROHDE & SCHWARZ	ES-K1 V1.71	N/A	11/05/2016

5. EQUIVALENT ISOTROPICALLY RADIATED POWER

5.1 LIMIT

ETSI EN 300 440-1 (V.1.6.1)

The equivalent isotropically radiated power as defined in ETSI EN 300 440-1 Sub-clause 7.1.1 under normal and extreme test conditions shall not exceed the value given in table 1 below.

Table 1: Maximum Peak Radiated Power(eirp)

Power Class (Note 1)	Power level (conducted or radiated)
8	10 mW
9	25 mW
11	100 mW
12	500 mW (See Note 2)
13	1 W
14	2 W
14a	4 W (See Note 2)
Note 1: Class designation is based on CEPT/ERC Recommendation 70-03 [1]. Note 2: For RFID applications, see annex C of the present document.	

For equipment with an integral antenna and no RF connector, measurements under extreme conditions are not required.

5.2 TEST CONFIGURATION

Below 1GHz

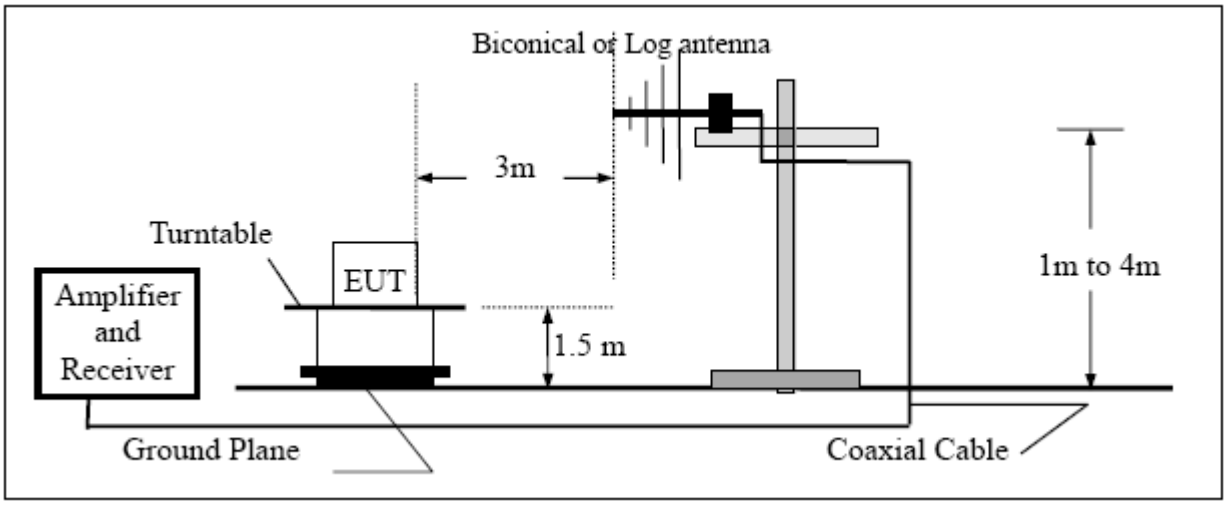

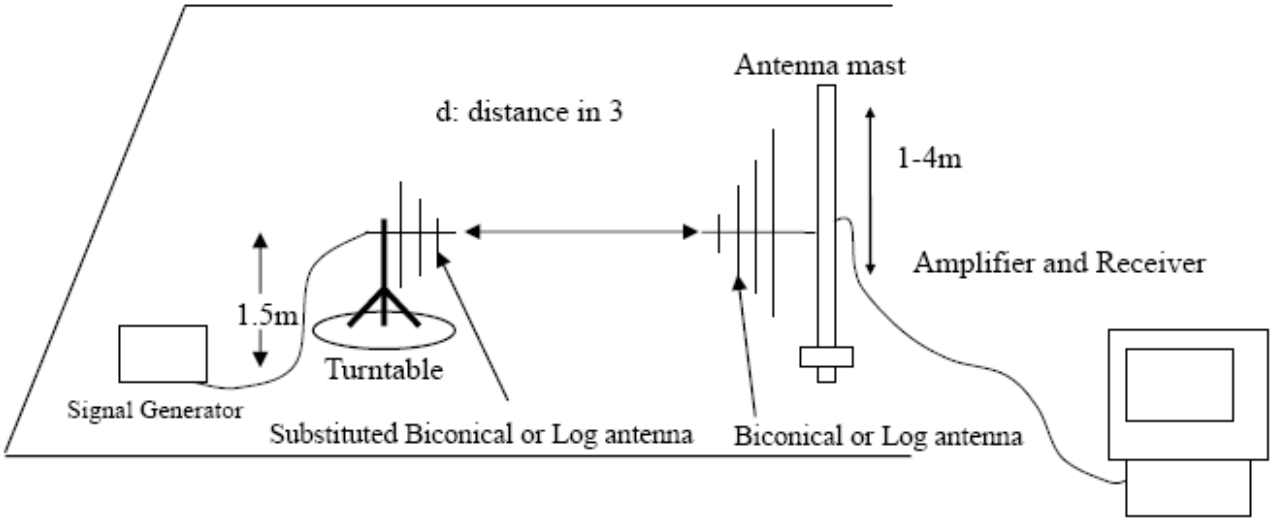

Above 1GHz

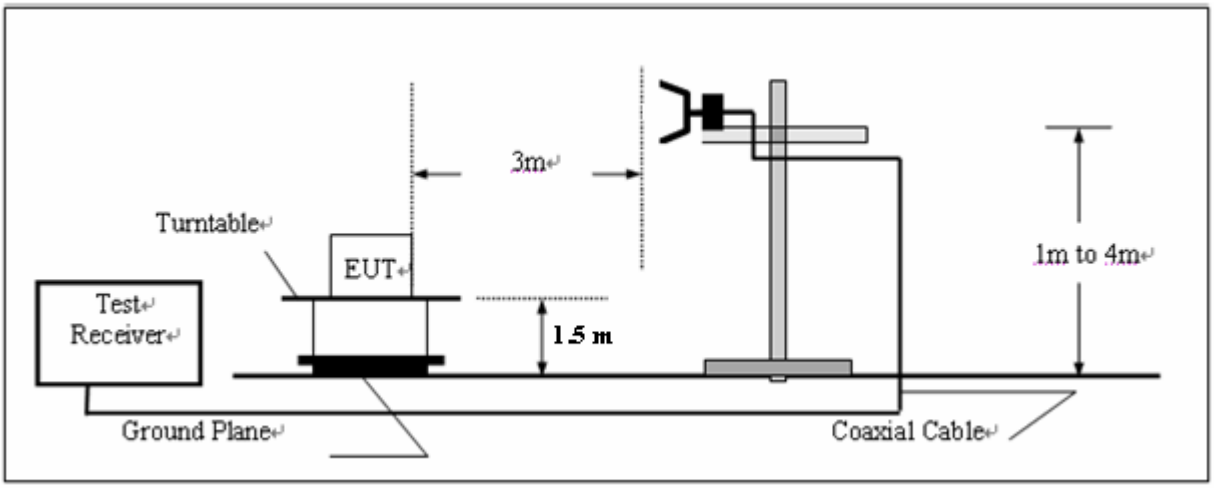

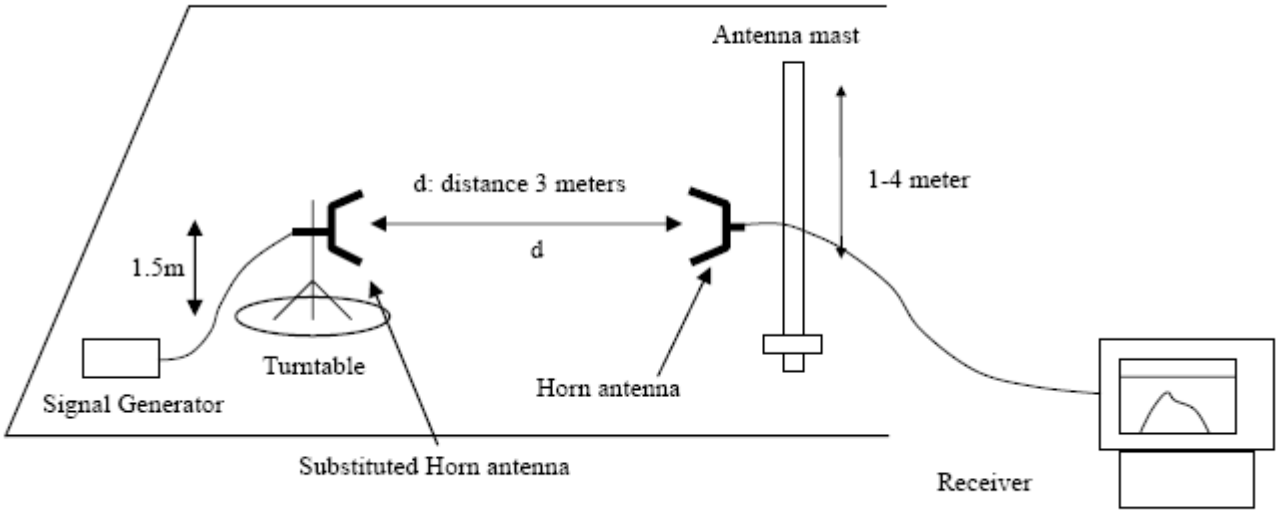

5.3 TEST PROCEDURE

1. Please refer to ETSI EN 300 440-1 (V.1.6.1)

5.4 TEST RESULTS

Table 1 for 2400MHz

Frequency (MHZ)	Antenna Polarization	Emission level (dBm)	Limit (dBm)	Margin
2408	V	0.47	10	9.53
2408	H	0.44	10	9.56

Table 2 for 2440MHz

Frequency (MHZ)	Antenna Polarization	Emission level (dBm)	Limit (dBm)	Margin
2440	V	0.41	10	9.59
2440	H	0.37	10	9.63

Table 3 for 2483.5MHz

Frequency (MHZ)	Antenna Polarization	Emission level (dBm)	Limit (dBm)	Margin
2483.5	V	0.42	10	9.58
2483.5	H	0.43	10	9.57

Remark:
(1) Corrected Power (dBm) = SG O/P-Cable + Ant Gain
(2) Measuring frequencies from 30 MHz to the 40GHz.
(3) Data of measurement within this frequency range shown “--” in the table above means the reading of emissions are attenuated more than 20dB below the permissible limits or the field strength is too small to be measured.

6. PERMITTED RANGE OF OPERATING FREQUENCIES

6.1 LIMIT

Please refer to ETSI EN 300 440-1 (V.1.6.1)

6.2 TEST CONFIGURATION

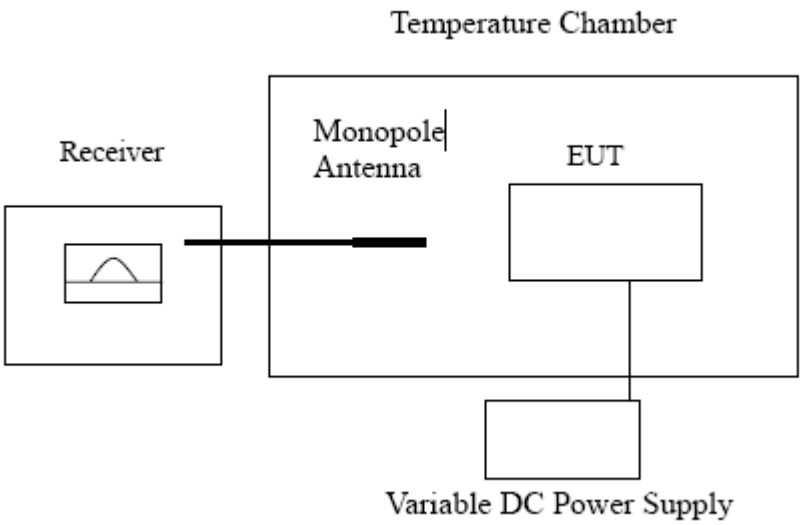

6.3 TEST PROCEDURE

1. Please refer to ETSI EN 300 440-1 (V.1.6.1)

6.4 TEST RESULTS

Measurement Result

Test Cpmdition		Frequency Measured (MHZ)
Temperature	Voltage(V)	
T Nor (25℃)	5V	2407.5126
T min (-20℃)	5V	2407.5128
	4.5V	2407.5116
T Max (+55℃)	5V	2407.5125
	4.5V	2407.5132
	Result	Pass

Test Cpmdition		Frequency Measured (MHZ)
Temperature	Voltage(V)	
T Nor (25℃)	5V	2474.5034
T min (-20℃)	5V	2474.5028
	4.5V	2474.5019
T Max (+55℃)	5V	2474.5024
	4.5V	2474.5036
	Result	Pass

7. SPURIOUS EMISSIONS

7.1 LIMIT

ETSI EN 300 440-1 (V.1.6.1)
Spurious emission as defined in ETSI EN 300 440-1, the power of any spurious emission shall not exceed the following values given in table 2

Table 2: Radiated spurious emissions

State	47 MHz to 74 MHz 87.5 MHz to 118 MHz 174 MHz to 230 MHz 470 MHz to 862 MHz	Other frequencies ≤1000 MHz	Frequencies > 1000 MHz
Operating	4 nW (-54 dBm)	250 nW (-36 dBm)	1.00μW (-30 dBm)
Standby	2 nW (-57 dBm)	2 nW (57 dBm)	2 nW (57 dBm)

7.2 TEST CONFIGURATION

The same as described in section 6.1

7.3 TEST PROCEDURE

1. Please refer to ETSI EN 300 440-1 (V.1.6.1)

7.4 TEST RESULTS

Effective Radiated Power measurement (30 MHz to 40GHz)--------PASS

Frequency (MHZ)	Reading Level (dBuV)	Antenna Polarization	S.G. (dBm)	Cable loss (dBi)	Ant.Gain (dBi)	Emission level (dBm)	Limit (dBm)	Margin
Below 1 GHz	--	V	--					At least 20dB down than the limit
Above 1 GHz	--	V	--					
Below 1 GHz	--	H	--					
Above 1 GHz	--	H	--					

Remark:
(1) Corrected Power (dBm) = SG O/P-Cable + Ant Gain
(2) Measuring frequencies from 30 MHz to the 40GHz.
(3) Data of measurement within this frequency range shown “--” in the table above means the reading of emissions are attenuated more than 20dB below the permissible limits or the field strength is too small to be measured.

8. DUTY CYCLE

8.1 LIMIT

ETSI EN 300 440-1 (V 1.4.1)
The duty cycle as defined in ETSI EN 300 440-1, shall not exceed the value given in table 3 in a observation period of 1 hour

Table 3

Duty Cycle class	Duty Cycle Ratio
1	≤ 0.1 %
2	≤ 1.0 %
3	≤ 10 %
4	≤ Up to 100 %

8.2 TEST CONFIGURATION

N/A

8.3 TEST PROCEDURE

Please refer to ETSI EN 300 440-1 (V.1.6.1)

8.4 TEST RESULTS

PASS

9. SPURIOUS RADIATION

12.1 LIMIT

ETSI EN 300 440-1(V 1.4.1)
The power of any spurious as defined in ETSI EN 300 440-1, shall not exceed 2 nW (- 57 dBm) in the range 25 MHz to 1 GHz and shall not exceed 20 nW (-47 dBm) on frequencies above 1 GHz, see as table 6

Table 6: Power of spurious emissions

Frequency Range	30 MHz to 1GHz	Above 1GHz
Limit	2.0 nW (-57 dBm)	20 nW (-47 dBm)

12.2 TEST CONFIGURATION

The same as described in section 6.1

12.3 TEST PROCEDURE

3. Please refer to ETSI EN 300 440-1 (V.1.6.1)

12.4 TEST RESULTS

Measurement Result

Frequency (MHZ)	Reading Level (dBuV)	Antenna Polarization	S.G. (dBm)	Cable loss (dBi)	Ant.Gain (dBi)	Emission level (dBm)	Limit (dBm)	Margin
Below 1 GHz	--	V	--					At least 20dB down than the limit
Above 1 GHz	--	V	--					
Below 1 GHz	--	H	--					
Above 1 GHz	--	H	--					

Remark:
(1) Corrected Power (dBm) = SG O/P-Cable + Ant Gain
(2) Measuring frequencies from 30 MHz to the 40GHz.
(3) Data of measurement within this frequency range shown “ -- ” in the table above means the reading of emissions are attenuated more than 20dB below the permissible limits or the field strength is too small to be measured.

APPENDIX I

Refer to report **BSTDG1611656400001ER-1**

ENJOY TECHNOLOGY CO., LIMITED

CE LVD REPORT

Prepared For :	ENJOY TECHNOLOGY CO., LIMITED UNIT 04, 7/F BRIGHT WAY TOWER NO.33 MONG KOK RD KL
Product Name:	AUDIENCE RESPONSE SYSTEM
Model :	217, 218, 219, 207, 237, 238, 317, 319, 419, 229, RF219 VoteWorks Engage
Prepared By :	Shenzhen BST Technology Co., Ltd. Building No.23-24, Zhiheng Industrial Park, Guankouer Road, Nantou, Nanshan District,Shenzhen,Guangdong,China
Test Date:	Sep. 12-22, 2016
Date of Report :	Sep. 23, 2016
Report No.:	BSTDG1611656400001SR-2

LVD Report
EN60950-1
Information technology equipment - Safety - Part 1: General requirements

Testing laboratory …….. :	Shenzhen BST Technology Co.,Ltd.
Address …….. :	Building No.23-24, Zhiheng Industrial Park, Guankouer Road, Nantou, Nanshan District,Shenzhen,Guangdong,China
Testing location …….. :	Shenzhen BST Technology Co.,Ltd.
Applicant …… :	ENJOY TECHNOLOGY CO., LIMITED
Address …….. :	UNIT 04, 7/F BRIGHT WAY TOWER NO.33 MONG KOK RD KL
Standard ……:	EN 60950-1:2006+A11:2009+A1:2010+A12:2011+A2:2013
Test Result ……:	Compliance with EN60950-1:2006+A11:2009+A1:2010+A12:2011+A2:2013
Procedure deviation …… :	N/A.
Non-standard test method …… :	N/A.
Type of test object …….. :	AUDIENCE RESPONSE SYSTEM
Trademark …… :	Quiz ENJOY TECH
Model/type reference …….. :	217, 218, 219, 207, 237, 238, 317, 319, 419, 229, RF219 VoteWorks Engage
Rating …… :	DC5V, 0.3A, 1.5W
Manufacturer …… :	GUANGZHOU QILE TECHNOLOGY CO., LTD
Address …….. :	3/F and 4/F, 3#, Nanbian street, Dayuan Nan Road, Baiyun District, Guangzhou, Guangdong Province, China
Test item particulars :	
Equipment mobility …… :	Portable equipment
Operation condition …… :	Continuous
Class of equipment …… :	Class III
Protection against ingress of water . :	IP20

Possible test case verdicts :

test case does not apply to the test object …….. : N(.A.)

test object does meet the requirement …….…… : P(ass)

test object does not meet the requirement ……. : F(ail)

Name and address of the testing laboratory : **Shenzhen BST Technology Co.,Ltd.**
Building No.23-24, Zhiheng Industrial Park,
Guankouer Road, Nantou, Nanshan
District,Shenzhen,Guangdong,China

Test by : Apple Li
Signature

Sep. 23, 2016
Date

Technician
Title

Review by :
Signature

Sep. 23, 2016
Date

Project Engineer
Title

Approved by :
Signature

Sep. 23, 2016
Date

Andy Yan/ Manager
Name and Title

General remarks:	
"(see remark #)" refers to a remark appended to the report. "(see appended table)" refers to a table appended to the report. Throughout this report a comma is used as the decimal separator. The test results presented in this report relate only to the object tested. This report shall not be reproduced except in full without the written approval of the testing laboratory.	Attached with: A. photo documentation B. General product information: The series products have the same circuit diagram, PCB layout and functionality. The differences are the appearance, so, we select 217 to test.

Artwork of Marking Label

AUDIENCE RESPONSE SYSTEM
Model : 217
Rated : DC5V, 0.3A, 1.5W

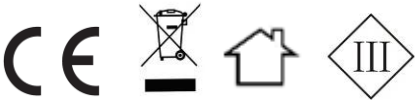

ENJOY TECHNOLOGY CO., LIMITED

EN 60950-1			
Clause	Requirement - Test	Result - Remark	Verdict

1	GENERAL		P
1.5	Components		P
1.5.1	General	See below.	P
	Comply with EN 60950 or relevant component standard	Components which were found to affect safety aspects comply with the requirements of this standard or with the safety aspects of the relevant IEC/EN component standards (see appended table 1.5.1).	P
1.5.2	Evaluation and testing of components	Components that are certified to IEC and /or national standards are used correctly within their ratings. Components not covered by IEC standards are tested under the conditions present in the equipment.	P
1.5.3	Thermal controls	No such components	N/A
1.5.4	Transformers	No isolating transformer in the equipment.	N/A
1.5.5	Interconnecting cables	No interconnecting cables.	N/A
1.5.6	Capacitors in primary circuits ..... :	Class III equipment.	N/A
1.5.7	Double insulation or reinforced insulation bridged by components	Class III equipment.	N/A
1.5.7.1	General	Refer to below	—
1.5.7.2	Bridging capacitors	Class III equipment.	N/A
1.5.7.3	Bridging resistors	Class III equipment.	N/A
1.5.7.4	Accessible parts	Class III equipment.	N/A
1.5.8	Components in equipment for IT power systems	Class III equipment.	N/A

1.6	Power interface		P
1.6.1	AC power distribution systems	DC supplied.	N/A
1.6.2	Input current		—
1.6.3	Voltage limit of hand-held equipment	The equipment is not hand-held.	N/A
1.6.4	Neutral conductor	Connected to SELV only, class III equipment.	N/A

EN 60950-1			
Clause	Requirement - Test	Result - Remark	Verdict
1.7	Marking and instructions		P
1.7.1	Power rating	All relevant markings are provided on a label.	P
	Rated voltage(s) or voltage range(s) (V) .....:	DC5V	—
	Symbol for nature of supply, for d.c. only	IEC 60417-1, symbol No. 5031, is used.	P
	Rated frequency or rated frequency range (Hz) :	DC supplied.	—
	Rated current (mA or A) .....:	0.3A	—
	Manufacturer's name or trademark or identification mark .....:	Quiz ENJOY TECH	P
	Type/model or type reference.....:	217	P
	Symbol for Class II equipment only	Class III equipment.	N/A
	Other symbols .....:	The additional marking does not give rise to misunderstandings.	P
	Certification marks .....:	See copy of marking plates for details.	P
1.7.2	Safety instructions	Safety instructions in English. Other languages will be provided when submitted for national approval.	P
1.7.3	Short duty cycles	The equipment is intended for continuous operation.	N/A
1.7.4	Supply voltage adjustment:	No voltage selector.	N/A
1.7.5	Power outlets on the equipment .....:	No standard power outlet.	N/A
1.7.6	Fuse identification .....:	Class III equipment.	N/A
1.7.7	Wiring terminals	Refer below:	—
1.7.7.1	Protective earthing and bonding terminals .....:	Class III equipment.	N/A
1.7.7.2	Terminal for a.c. mains supply conductors	Class III equipment.	N/A
1.7.7.3	Terminals for d.c. mains supply conductors	Class III equipment.	N/A
1.7.8	Controls and indicators	Refer below:	—
1.7.8.1	Identification, location and marking .....:	No controls.	N/A
1.7.8.2	Colours :	No controls.	N/A
1.7.8.3	Symbols according to IEC 60417	There are no switches in the equipment.	N/A
1.7.8.4	Markings using figures .....:	No controls.	N/A
1.7.9	Isolation of multiple power sources	Class III equipment.	N/A
1.7.10	IT power distribution systems	Class III equipment.	N/A

EN 60950-1			
Cl.	Requirement – Test	Result	Verdict
1.7.11	Thermostats and other regulating devices	No such components	N/A
1.7.12	Language ..... :	Rating marking in English. User's manual was provided in English language, version in other languages will be provided applied for other national certificates.	—
1.7.13	Durability	The label was subjected to the permanence of marking test. The label was rubbed with cloth soaked with water for 15 s and then again for 15 s with the cloth soaked with petroleum spirit. After this test there was no damage to the label. The marking on the label did not fade. There was no curling or lifting of the label edge.	P
1.7.14	Removable parts	No removable parts.	N/A
1.7.15	Replaceable batteries		N/A
	Language ..... :	English	—
1.7.16	Operator access with a tool ..... :	All areas containing hazards are inaccessible to the operator.	N/A
1.7.17	Equipment for restricted access locations ..... :	Equipment not intended for installation in RAL.	N/A

2	PROTECTION FROM HAZARDS		N/A
2.1	Protection from electric shock and energy hazards		N/A
2.1.1	Protection in operator access areas	Refer below:	—
2.1.1.1	Access to energized parts	The EUT is Class III equipment, and no internal wiring at ELV.	N/A
	Test by inspection ..... :		—
	Test with test finger ..... :		—
	Test with test pin ..... :		—
	Test with test probe ..... :	No TNV circuits provided.	N/A
2.1.1.2	Battery compartments ..... :		N/A
2.1.1.3	Access to ELV wiring	No ELV wiring.	N/A
	Working voltage (V); minimum distance (mm) through insulation		—

EN 60950-1			
Cl.	Requirement – Test	Result	Verdict
2.1.1.4	Access to hazardous voltage circuit wiring	No internal wiring at hazardous voltage circuit.	N/A
2.1.1.5	Energy hazards .....:		N/A
2.1.1.6	Manual controls	No shafts of knobs etc.	N/A
2.1.1.7	Discharge of capacitors in equipment	Class III equipment.	N/A
	Time-constant (s); measured voltage (V) .....:		—
2.1.2	Protection in service access areas	Class III equipment, no hazardous bare parts inside.	N/A
2.1.3	Protection in restricted access locations	Equipment not intended for installation in RAL.	N/A
2.2	SELV circuits		P
2.2.1	General requirements	Class III equipment.	P
2.2.2	Voltages under normal conditions (V).....:		—
2.2.3	Voltages under fault conditions (V):		—
2.2.3.1	Separation by double insulation or reinforced insulation (method 1)	Class III equipment.	N/A
2.2.3.2	Separation by earthed screen (method 2)	Class III equipment.	N/A
2.2.3.3	Protection by earthing of the SELV circuit (method 3)	Class III equipment.	N/A
2.2.4	Connection of SELV circuits to other circuits.....	SELV circuits are only connected to other SELV circuits.	P
2.3	TNV circuits		N/A
2.3.1	Limits	Refer below.	N/A
	Type of TNV circuits.....:	No TNV circuits in the equipment.	—
2.3.2	Separation from other circuits and from accessible parts		N/A
	Insulation employed .....:		—
2.3.3	Separation from hazardous voltages		N/A
	Insulation employed .....:		—
2.3.4	Connection of TNV circuits to other circuits		N/A
	Insulation employed .....:		—
2.3.5	Test for operating voltages generated externally		N/A

EN 60950-1			
Cl.	Requirement – Test	Result	Verdict
2.4	Limited current circuits		N/A
2.4.1	General requirements	No limited current circuit	N/A
2.4.2	Limit values		N/A
	Frequency (Hz) .....:		—
	Measured current (mA) .....:		—
	Measured voltage (V).....:		—
	Measured capacitance (μF)		—
2.4.3	Connection of limited current circuits to other circuits		N/A
2.5	Limited power sources		P
	Inherently limited output		N/A
	Impedance limited output		N/A
	Overcurrent protective device limited output		P
	Regulating network limited output under normal operating and single fault conditio		N/A
	Regulating network limited output under normal operating conditions and overcurrent protective device limited output under single fault condition		N/A
	Output voltage (V), output current (A), apparent power (VA) .....:	See appended table 2.5	P
	Current rating of overcurrent protective device (A)		P
2.6	Provisions for earthing and bonding		N/A
2.6.1	Protective earthing	2.6.1 – 2.6.5.7 Class III equipment.	N/A
2.6.2	Functional earthing		N/A
2.6.3	Protective earthing and protective bonding conductors		—
2.6.3.1	General		—
2.6.3.2	Size of protective earthing conductors		N/A
	Rated current (A), cross-sectional area (mm^2), AWG.....:		—
2.6.3.3	Size of protective bonding conductors		—
	Rated current (A), cross-sectional area (mm2), AWG.....:		—
2.6.3.4	Resistance (Ω) of earthing conductors and their terminations, test current (A)……:		N/A

EN 60950-1			
Cl.	Requirement – Test	Result	Verdict
2.6.3.5	Colour of insulation……:		N/A
2.6.4	Terminals		—
2.6.4.1	General		—
2.6.4.2	Protective earthing and bonding terminals		—
	Rated current (A), type and nominal thread diameter (mm)..... :		N/A
2.6.4.3	Separation of the protective earthing conductor from protective bonding conductors		N/A
2.6.5	Integrity of protective earthing		—
2.6.5.1	Interconnection of equipment		N/A
2.6.5.2	Components in protective earthing conductors and protective bonding conductors		N/A
2.6.5.3	Disconnection of protective earth		N/A
2.6.5.4	Parts that can be removed by an operator		N/A
2.6.5.5	Parts removed during servicing		N/A
2.6.5.6	Corrosion resistance		N/A
2.6.5.7	Screws for protective bonding		N/A
2.6.5.8	Reliance on telecommunication network or cable distribution system		N/A

2.7	Overcurrent and earth fault protection in primary circuits		N/A
2.7.1	Basic requirements	2.7.1 – 2.7.6 Class III equipment.	N/A
	Instructions when protection relies on building installation		N/A
2.7.2	Faults not covered in 5.3		N/A
2.7.3	Short-circuit backup protection		N/A
2.7.4	Number and location of protective devices .....:		N/A
2.7.5	Protection by several devices		N/A
2.7.6	Warning to service personnel .....:		N/A

2.8	Safety interlocks		N/A
2.8.1	General principles	2.8.1 – 2.8.8 No safety interlocks	N/A
2.8.2	Protection requirements		N/A
2.8.3	Inadvertent reactivation		N/A
2.8.4	Fail-safe operation		N/A

EN 60950-1			
Cl.	Requirement – Test	Result	Verdict
2.8.5	Moving parts		N/A
2.8.6	Overriding		N/A
2.8.7	Switches and relays		N/A
2.8.7.1	Contact gaps (mm) ..... :		N/A
2.8.7.2	Overload test		N/A
2.8.7.3	Endurance test		N/A
2.8.7.4	Electric strength test		N/A
2.8.8	Mechanical actuators		N/A
2.9	Electrical insulation		P
2.9.1	Properties of insulating materials	2.9.1 – 2.9.3 Class III equipment.	N/A
2.9.2	Humidity conditioning		—
	Humidity (%) ..... :		—
	Temperature (°C) ..... :		—
2.9.3	Grade of insulation		N/A
2.10	Clearances, creepage distances and distances through insulation		N/A
2.10.1	General	2.10.1 – 2.10.10 Class III equipment. Only functional insulation complying with Cl. 5.3.4.	N/A
2.10.2	Determination of working voltage		N/A
2.10.3	Clearances		N/A
2.10.3.1	General		—
2.10.3.2	Clearances in primary circuit		N/A
2.10.3.3	Clearances in secondary circuits		N/A
2.10.3.4	Measurement of transient voltage levels		N/A
2.10.4	Creepage distances		N/A
	CTI tests..... :		—
2.10.5	Solid insulation		N/A
2.10.5.1	Minimum distance through insulation		N/A
2.10.5.2	Thin sheet material		N/A
	Number of layers (pcs) ..... :		—
	Electric strength test		N/A
2.10.5.3	Printed boards		N/A

EN 60950-1			
Cl.	Requirement – Test	Result	Verdict
	Distance through insulation		N/A
	Electric strength test for thin sheet insulating material		—
	Number of layers (pcs) .....:		N/A
2.10.5.4	Wound components		N/A
	Number of layers (pcs) .....:		—
	Two wires in contact inside wound component; angle between 45° and 90° .....:		N/A
2.10.6	Coated printed boards		N/A
2.10.6.1	General		N/A
2.10.6.2	Sample preparation and preliminary inspection		N/A
2.10.6.3	Thermal cycling		N/A
2.10.6.4	Thermal ageing (°C) .....:		N/A
2.10.6.5	Electric strength test		—
2.10.6.6	Abrasion resistance test		N/A
	Electric strength test		—
2.10.7	Enclosed and sealed parts .....:		N/A
	Temperature T_1=T_2 = T_{ma} – T_{amb} +10K (°C).....:		N/A
2.10.8	Spacings filled by insulating compound.....		N/A
	Electric strength test		—
2.10.9	Component external terminations		N/A
2.10.10	Insulation with varying dimensions		N/A

3	WIRING, CONNECTIONS AND SUPPLY		N/A
3.1	General		N/A
3.1.1	Current rating and overcurrent protection		N/A
3.1.2	Protection against mechanical damage		N/A
3.1.3	Securing of internal wiring		N/A
3.1.4	Insulation of conductors	Not applicable.	N/A
3.1.5	Beads and ceramic insulators	No beads or similar ceramic insulators on conductors.	N/A
3.1.6	Screws for electrical contact pressure	No screw.	N/A
3.1.7	Insulating materials in electrical connections	Class III equipment.	N/A
3.1.8	Self-tapping and spaced thread screws	No screw.	N/A
3.1.9	Termination of conductors	No applicable.	N/A
	10 N pull test		N/A

EN 60950-1			
Cl.	Requirement – Test	Result	Verdict
3.1.10	Sleeving on wiring	No sleeving.	N/A
3.2	Connection to an a.c. mains supply or a d.c. mains supply		P
3.2.1	Means of connection .....:	3.2.1 – 3.2.9 Class III equipment. No connection to mains supply.	N/A
3.2.1.1	Connection to an a.c. mains supply		N/A
3.2.1.2	Connection to a d.c. mains supply		P
3.2.2	Multiple supply connections		N/A
3.2.3	Permanently connected equipment		N/A
	Number of conductors, diameter (mm) of cable and conduits .....:		—
3.2.4	Appliance inlets		N/A
3.2.5	Power supply cords		—
3.2.5.1	AC power supply cords		N/A
	Type .....:		—
	Rated current (A), cross-sectional area (mm^2), AWG..... :		—
3.2.5.2	DC power supply cords		N/A
3.2.6	Cord anchorages and strain relief		N/A
	Mass of equipment (kg), pull (N) ..... :		—
	Longitudinal displacement (mm) ..... :		—
3.2.7	Protection against mechanical damage		N/A
3.2.8	Cord guards		N/A
	D (mm); test mass (g) ..... :		—
	Radius of curvature of cord (mm) ..... :		—
3.2.9	Supply wiring space		N/A
3.3	Wiring terminals for connection of external conductors.		N/A
3.3.1	Wiring terminals	3.3.1 – 3.3.8 Class III equipment.	N/A
3.3.2	Connection of non-detachable power supply cords		N/A
3.3.3	Screw terminals		N/A
3.3.4	Conductor sizes to be connected		N/A
	Rated current (A), cord/cable type, cross-sectional area (mm^2) .....:		—

EN 60950-1			
Cl.	Requirement – Test	Result	Verdict
3.3.5	Wiring terminal sizes		N/A
	Rated current (A), type and nominal thread diameter (mm) .....:		—
3.3.6	Wiring terminals design		N/A
3.3.7	Grouping of wiring terminals		N/A
3.3.8	Stranded wire		N/A
3.4	Disconnection from the mains supply		N/A
3.4.1	General requirement	3.4.1 – 3.4.11 Class III equipment. No connection to mains supply.	N/A
3.4.2	Disconnect devices		N/A
3.4.3	Permanently connected equipment		N/A
3.4.4	Parts which remain energized		N/A
3.4.5	Switches in flexible cords		N/A
3.4.6	Single-phase equipment and d.c. equipment		N/A
3.4.7	Three-phase equipment		N/A
3.4.8	Switches as disconnect devices		N/A
3.4.9	Plugs as disconnect devices		N/A
3.4.10	Interconnected equipment		N/A
3.4.11	Multiple power sources		N/A
3.5	Interconnection of equipment		P
3.5.1	General requirements	See below.	—
3.5.2	Types of interconnection circuits:	SELV circuit	P
3.5.3	ELV circuits as interconnection circuits	No ELV interconnections.	N/A
4	PHYSICAL REQUIREMENTS		P
4.1	Stability		N/A
	Angle of 10°		N/A
	Test: force (N) .....:		N/A
4.2	Mechanical strength		P
4.2.1	General		P
4.2.2	Steady force test, 10 N		P
4.2.3	Steady force test, 30 N		N/A
4.2.4	Steady force test, 250 N		P

EN 60950-1			
Cl.	Requirement – Test	Result	Verdict
4.2.5	Impact test		—
	Fall test		P
	Swing test		N/A
4.2.6	Drop test		N/A
4.2.7	Stress relief test		N/A
4.2.8	Cathode ray tubes		N/A
	Picture tube separately certified .....:		N/A
4.2.9	High pressure lamps		N/A
4.2.10	Wall or ceiling mounted equipment; force (N) ...:		N/A
4.3	Design and construction		P
4.3.1	Edges and corners		P
4.3.2	Handles and manual controls; force (N).....:	No knobs, grips, handles, lever etc.	N/A
4.3.3	Adjustable controls	No hazardous adjustable controls.	N/A
4.3.4	Securing of parts	Not applicable.	N/A
4.3.5	Connection of plugs and sockets	SELV connectors do not comply with IEC 60320-1 or IEC 60083	N/A
4.3.6	Direct plug-in equipment	Not applicable.	N/A
	Dimensions (mm) of mains plug for direct plug-in .....:		—
	Torque and pull test of mains plug for direct plug-in; torque (Nm); pull (N) .....:		N/A
4.3.7	Heating elements in earthed equipment	No heating elements provided.	N/A
4.3.8	Batteries		N/A
4.3.9	Oil and grease	Insulation is not exposed to oil and grease etc.	N/A
4.3.10	Dust, powders, liquids and gases	The equipment does not contain flammable liquids or gases.	N/A
4.3.11	Containers for liquids or gases	No containers for liquids or gases in the equipment.	N/A
4.3.12	Flammable liquids .....:	The equipment does not contain flammable liquid.	N/A
	Quantity of liquid (l) .....:		N/A
	Flash point (°C) .....:		N/A

EN 60950-1			
Cl.	Requirement – Test	Result	Verdict
4.3.13	Radiation; type of radiation .....:	See below.	N/A
4.3.13.1	General	No ionizing radiation or laser or flammable liquids presents.	N/A
4.3.13.2	Ionizing radiation	No radiation.	N/A
	Measured radiation (pA/kg) ..... :		—
	Measured high-voltage (kV) ..... :		—
	Measured focus voltage (kV) ..... :		—
	CRT markings ..... :		—
4.3.13.3	Effect of ultraviolet (UV) radiation on materials	No UV radiation.	N/A
	Part, property, retention after test, flammability classification ..... :		N/A
4.3.13.4	Human exposure to ultraviolet (UV) radiation ..... :	No UV radiation.	N/A
4.3.13.5	Laser (including LEDs)		N/A
	Laser class ..... :	-	—
4.3.13.6	Other types ..... :	Not used.	N/A
4.4	Protection against hazardous moving parts		N/A
4.4.1	General	No moving parts.	N/A
4.4.2	Protection in operator access areas	No moving parts.	N/A
4.4.3	Protection in restricted access locations	Not intended for installation in RAL.	N/A
4.4.4	Protection in service access areas	Unintentional contact is not likely in service access areas.	N/A
4.5	Thermal requirements		P
4.5.1	Maximum temperatures	See appended table 4.5.1.	P
	Normal load condition per Annex L ..... :	Rated load with continuous operation.	N
4.5.2	Resistance to abnormal heat	No thermoplastic parts carrying hazardous voltages.	N/A
4.6	Openings in enclosures		N/A
4.6.1	Top and side openings		N/A
	Dimensions (mm) ..... :		—
4.6.2	Bottoms of fire enclosures		N/A
	Construction of the bottom..... :		—
4.6.3	Doors or covers in fire enclosures		N/A

EN 60950-1			
Cl.	Requirement – Test	Result	Verdict

4.6.4	Openings in transportable equipment		N/A
4.6.5	Adhesives for constructional purposes		N/A
	Conditioning temperature (°C)/time (weeks) ..... :		—

4.7	Resistance to fire		P
4.7.1	Reducing the risk of ignition and spread of flame	Refer below:	—
	Method 1, selection and application of components wiring and materials	Use of materials with the required flammability classes.	P
	Method 2, application of all of simulated fault condition tests	Not applied for.	N/A
4.7.2	Conditions for a fire enclosure	Refer below:	P
4.7.2.1	Parts requiring a fire enclosure		N/A
4.7.2.2	Parts not requiring a fire enclosure		N/A
4.7.3	Materials		P
4.7.3.1	General	Components and materials have adequate flammability classification. See appended table 1.5.1.	P
4.7.3.2	Materials for fire enclosures		P
4.7.3.3	Materials for components and other parts outside fire enclosures		N/A
4.7.3.4	Materials for components and other parts inside fire enclosures		P
4.7.3.5	Materials for air filter assemblies	No air filters in the equipment.	N/A
4.7.3.6	Materials used in high-voltage components	No high-voltage components.	N/A

5	ELECTRICAL REQUIREMENTS AND SIMULATED ABNORMAL CONDITIONS		P
5.1	Touch current and protective conductor current		N/A
5.1.1	General	5.1.1 – 5.1.7 Class III equipment.	—
5.1.2	Equipment under test (EUT)		N/A
5.1.3	Test circuit		—
5.1.4	Application of measuring instrument		—
5.1.5	Test procedure		—
5.1.6	Test measurements		—
	Test voltage (V) .....:		—
	Measured touch current (mA) .....:		N/A
	Max. allowed touch current (mA) .....:		—

EN 60950-1			
Cl.	Requirement – Test	Result	Verdict
	Measured protective conductor current (mA) ....:		—
	Max. allowed protective conductor current (mA) :		—
5.1.7	Equipment with touch current exceeding 3.5 mA .....:		N/A
5.1.8	Touch currents to and from telecommunication networks and cable distribution systems and from telecommunication networks	Not connected to telecommunication networks.	N/A
5.1.8.1	Limitation of the touch current to a telecommunication network and a cable distribution system	No TNV.	N/A
	Test voltage (V) .....:		—
	Measured touch current (mA) .....:		—
	Max. allowed touch current (mA) .....:		—
5.1.8.2	Summation of touch currents from telecommunication networks ..... :	Not connected to a telecommunication network.	—
5.2	Electric strength		N/A
5.2.1	General	5.2.1 – 5.2.2 Class III equipment.	N/A
5.2.2	Test procedure		N/A
5.3	Abnormal operating and fault conditions		P
5.3.1	Protection against overload and abnormal operation	see appended table 5.3	P
5.3.2	Motors		N/A
5.3.3	Transformers	No insulation transformer.	N/A
5.3.4	Functional insulation .....:	Complies with c), materials mounted on V-1 or better.	P
5.3.5	Electromechanical components	No electromechanical components in secondary circuits.	N/A
5.3.6	Simulation of faults	See the enclosed fault condition tests.	P
5.3.7	Unattended equipment	No thermostats, temperature limiters or thermal cut-outs	N/A
5.3.8	Compliance criteria for abnormal operating and fault conditions	No reduction of clearance and creepage distances. Electric strength test is made on double / reinforced insulation.	P

EN 60950-1			
Cl.	Requirement – Test	Result	Verdict
6	CONNECTION TO TELECOMMUNICATION NETWORKS *No TNV.*		N/A
6.1	Protection of telecommunication network service persons, and users of other equipment connected to the network, from hazards in the equipment		N/A
6.1.1	Protection from hazardous voltages		N/A
6.1.2	Separation of the telecommunication network from earth		N/A
6.1.2.1	Requirements		N/A
	Test voltage (V) ..... :		—
	Current in the test circuit (mA) ..... :		—
6.1.2.2	Exclusions ..... :		N/A
6.2	Protection of equipment users from overvoltages on telecommunication networks		N/A
6.2.1	Separation requirements		N/A
6.2.2	Electric strength test procedure		N/A
6.2.2.1	Impulse test		N/A
6.2.2.2	Steady-state test		N/A
6.2.2.3	Compliance criteria		N/A
6.3	Protection of the telecommunication wiring system from overheating		N/A
	Max. output current (A) .....:		—
	Current limiting method .....:		—
7	CONNECTION TO CABLE DISTRIBUTION SYSTEMS		N/A
7.1	Protection of cable distribution system service persons, and users of other equipment connected to the system, from hazardous voltages in the equipment		N/A
7.2	Protection of equipment users from overvoltages on the cable distribution system		N/A
7.3	Insulation between primary circuits and cable distribution systems		N/A
7.3.1	General		N/A
7.3.2	Voltage surge test		N/A
7.3.3	Impulse test		N/A
A	ANNEX A, TESTS FOR RESISTANCE TO HEAT AND FIRE		N/A
A.1	Flammability test for fire enclosures of movable equipment having a total mass exceeding 18 kg, and of stationary equipment (see 4.7.3.2)		N/A
A.1.1	Samples .....:	Equipment < 18kg.	—
	Wall thickness (mm).....:		—

EN 60950-1			
Cl.	Requirement – Test	Result	Verdict
A.1.2	Conditioning of samples; temperature (°C).....:		N/A
A.1.3	Mounting of samples .....:		N/A
A.1.4	Test flame		N/A
A.1.5	Test procedure		N/A
A.1.6	Compliance criteria		N/A
	Sample 1 burning time (s) .....:		—
	Sample 2 burning time (s) .....:		—
	Sample 3 burning time (s) .....:		—
A.2	Flammability test for fire enclosures of movable equipment having a total mass not exceeding 18 kg, and for material and components located inside fire enclosures (see 4.7.3.2 and 4.7.3.4)		N/A
A.2.1	Samples, material .....:	All materials have suitable flame class, not testing required	—
	Wall thickness (mm).....:		—
A.2.2	Conditioning of samples		N/A
A.2.3	Mounting of samples		N/A
A.2.4	Test flame		N/A
A.2.5	Test procedure		N/A
A.2.6	Compliance criteria		N/A
	Sample 1 burning time (s) .....:		—
	Sample 2 burning time (s) .....:		—
	Sample 3 burning time (s) .....:		—
A.2.7	Alternative test acc. to IEC 60695-2-2, cl. 4, 8		N/A
	Sample 1 burning time (s) .....:		—
	Sample 2 burning time (s) .....:		—
	Sample 3 burning time (s) .....:		—
A.3	Hot flaming oil test (see 4.6.2)		N/A
A.3.1	Mounting of samples		N/A
A.3.2	Test procedure		N/A
A.3.3	Compliance criterion		N/A
B	ANNEX B, MOTOR TESTS UNDER ABNORMAL CONDITIONS (see 4.7.2.2 and 5.3.2)		N/A
B.1	General requirements		N/A
	Position .....:		—
	Manufacturer .....:		—

EN 60950-1			
Cl.	Requirement – Test	Result	Verdict
	Type .....:		—
	Rated values .....:		—
B.2	Test conditions		N/A
B.3	Maximum temperatures		N/A
B.4	Running overload test		N/A
B.5	Locked-rotor overload test		N/A
	Test duration (days) :		—
	Electric strength test: test voltage (V) :		—
B.6	Running overload test for d.c. motors in secondary circuits		N/A
B.7	Locked-rotor overload test for d.c. motors in secondary circuits		N/A
B.7.1	Test procedure		N/A
B.7.2	Alternative test procedure; test time (h) .....:		N/A
B.7.3	Electric strength test		N/A
B.8	Test for motors with capacitors		N/A
B.9	Test for three-phase motors		N/A
B.10	Test for series motors		N/A
	Operating voltage (V) .....:		—
C	ANNEX C, TRANSFORMERS (see 1.5.4 and 5.3.3)		N/A
	Position .....:	No insulation transformer used.	—
	Manufacturer .....:		—
	Type .....:		—
	Rated values .....:		—
	Method of protection .....:		—
C.1	Overload test		N/A
C.2	Insulation		N/A
	Protection from displacement of windings .....:		N/A
D	ANNEX D, MEASURING INSTRUMENTS FOR TOUCH-CURRENT TESTS		N/A
D.1	Measuring instrument		N/A
D.2	Alternative measuring instrument		N/A
E	ANNEX E, TEMPERATURE RISE OF A WINDING (see 1.4.13)		N/A

EN 60950-1			
Cl.	Requirement – Test	Result	Verdict
F	ANNEX F, MEASUREMENT OF CLEARANCES AND CREEPAGE DISTANCES (see 2.10)		N/A
G	ANNEX G, ALTERNATIVE METHOD FOR DETERMINING MINIMUM CLEARANCES		N/A
G.1	Summary of the procedure for determining minimum clearances		N/A
G.2	Determination of mains transient voltage (V) ..... :		N/A
G.2.1	AC mains supply		N/A
G.2.2	DC mains supply		N/A
G.3	Determination of telecommunication network transient voltage (V)..... :		N/A
G.4	Determination of required withstand voltage (V) :		N/A
G.5	Measurement of transient levels (V)..... :		N/A
G.6	Determination of minimum clearances ..... :		N/A
H	ANNEX H, IONIZING RADIATION (see 4.3.13)		N/A
J	ANNEX J, TABLE OF ELECTROCHEMICAL POTENTIALS (see 2.6.5.6)		N/A
	Metal used ..... :		—
K	ANNEX K, THERMAL CONTROLS (see 1.5.3 and 5.3.7)		N/A
K.1	Making and breaking capacity		N/A
K.2	Thermostat reliability; operating voltage (V)..... :		N/A
K.3	Thermostat endurance test; operating voltage (V) ..... :		N/A
K.4	Temperature limiter endurance; operating voltage (V) ..... :		N/A
K.5	Thermal cut-out reliability		N/A
K.6	Stability of operation		N/A
L	ANNEX L, NORMAL LOAD CONDITIONS FOR SOME TYPES OF ELECTRICAL BUSINESS EQUIPMENT (see 1.2.2.1 and 4.5.1)		N/A
L.1	Typewriters		N/A
L.2	Adding machines and cash registers		N/A
L.3	Erasers		N/A
L.4	Pencil sharpeners		N/A
L.5	Duplicators and copy machines		N/A
L.6	Motor-operated files		N/A
L.7	Other business equipment		N/A

EN 60950-1			
Cl.	Requirement – Test	Result	Verdict

M	ANNEX M, CRITERIA FOR TELEPHONE RINGING SIGNALS (see 2.3.1)		N/A
M.1	Introduction		N/A
M.2	Method A		N/A
M.3	Method B		N/A
M.3.1	Ringing signal		N/A
M.3.1.1	Frequency (Hz) .....:		—
M.3.1.2	Voltage (V) .....:		—
M.3.1.3	Cadence; time (s), voltage (V) .....:		—
M.3.1.4	Single fault current (mA) .....:		—
M.3.2	Tripping device and monitoring voltage .....:		N/A
M.3.2.1	Conditions for use of a tripping device or a monitoring voltage		N/A
M.3.2.2	Tripping device		N/A
M.3.2.3	Monitoring voltage (V).....:		N/A
N	ANNEX N, IMPULSE TEST GENERATORS (see 2.10.3.4, 6.2.2.1, 7.3.2 and clause G.5)		N/A
N.1	ITU-T impulse test generators		N/A
N.2	IEC 60065 impulse test generator		N/A
P	ANNEX P, NORMATIVE REFERENCES		P

Q	ANNEX Q, BIBLIOGRAPHY		P

R	ANNEX R, EXAMPLES OF REQUIREMENTS FOR QUALITY CONTROL PROGRAMMES		N/A
R.1	Minimum separation distances for unpopulated coated printed boards (see 2.10.6)		N/A
R.2	Reduced clearances (see 2.10.3)		N/A

S	ANNEX S, PROCEDURE FOR IMPULSE TESTING (see 6.2.2.3)		N/A
S.1	Test equipment		N/A
S.2	Test procedure		N/A
S.3	Examples of waveforms during impulse testing		N/A

T	ANNEX T, GUIDANCE ON PROTECTION AGAINST INGRESS OF WATER (see 1.1.2)		N/A
			—

EN 60950-1			
Cl.	Requirement – Test	Result	Verdict
U	ANNEX U, INSULATED WINDING WIRES FOR USE WITHOUT INTERLEAVED INSULATION (see 2.10.5.4)		N/A
			—
V	ANNEX V, AC POWER DISTRIBUTION SYSTEMS (see 1.6.1)		N/A
V.1	Introduction		N/A
V.2	TN power distribution systems		—
V.3	TT power systems		—
V.4	IT power systems		—
W	ANNEX W, SUMMATION OF TOUCH CURRENTS		N/A
W.1	Touch current from electronic circuits		N/A
W.1.2	Earthed circuits		N/A
W.2	Interconnection of several equipments		N/A
W.2.1	Isolation		N/A
W.2.2	Common return, isolated from earth		N/A
W.2.3	Common return, connected to protective earth		N/A
X	ANNEX X, MAXIMUM HEATING EFFECT IN TRANSFORMER TESTS (see clause C.1)		N/A
X.1	Determination of maximum input current	See Annex C.1	N/A
X.2	Overload test procedure	--	N/A
Y	ANNEX Y, ULTRAVIOLET LIGHT CONDITIONING TEST (see 4.3.13.3)		N/A
Y.1	Test apparatus .....:		N/A
Y.2	Mounting of test samples .....:		N/A
Y.3	Carbon-arc light-exposure apparatus .....:		N/A
Y.4	Xenon-arc light exposure apparatus .....:		N/A

EN 60950-1			
Cl.	Requirement – Test	Result	Verdict

CENELEC COMMON MODIFICATIONS [C], SPECIAL NATIONAL CONDITIONS [S] AND A-DEVIATIONS (NATIONAL DEVIATIONS) [A] (EN 60950-1:2001)			P
General	C: Delete all the "country" notes in the reference document according to the following list: 1.1.5 Note 2 1.5.8 Note 2 1.6.1 Note 1.7.2 Note 4 1.7.12 Note 2 2.6 Note 2.2.3 Note 2.2.4 Note 2.3.2 Note 2, 7, 8 2.3.3 Note 1, 2 Note 2.3.4 Note 2,3 2.7.1 2.10.3.1 Note 4 3.2.1.1 Note 3.2.3 Note 1, 2 3.2.5.1 Note 2 Note 4.3.6 Note 1,2 4.7.2.2 4.7.3.1 Note 2 6.1.2.1 Note 6.1.2.2 Note 6.2.2 Note 6.2.2.1 Note 2 6.2.2.2 Note 7 Note 4 7.1 Note G2.1 Note 1, 2 Annex H Note 2	Considered.	P
1.2.4.1	S (DK): Certain types of Class I appliances (see 3.2.1.1) may be provided with a plug not establishing earthing conditions when inserted into Danish socket-outlets.	Class III equipment.	N/A
1.5.1	A (SE, Ordinance 1990:944) and (CH, Ordinance on environmentally hazardous substances SR 814.013, Annex 3.2, Mercury): Add NOTE – Switches containing mercury such as thermostats, relays and level controllers are not allowed.	There are no components containing mercury in the equipment.	P
1.5.8	S (NO): Due to the IT power system used (see annex V, Fig. V.7), capacitors are required to be rated for the applicable line-to-line voltage (230 V).	Class III equipment.	N/A
1.7.2	S (FI, NO, SE): CLASS I PLUGGABLE EQUIPMENT TYPE A intended for connection to other equipment or a network shall, if safety relies on connection to protective earth or if surge suppressors are connected between the network terminals and accessible parts, have a marking stating that the equipment must be connected to an earthed mains socket-outlet. The marking text in the applicable countries shall be as follows:	Class III equipment.	N/A
	FI: "Laite on liitettävä suojamaadoituskoskettimilla varustettuun pistorasiaan"	Ditto.	N/A
	NO: "Apparatet må tilkoples jordet stikkontakt"	Ditto.	N/A
	SE: "Apparaten skall anslutas till jordat uttag"	Ditto.	N/A

EN 60950-1			
Cl.	Requirement – Test	Result	Verdict
	A (DK, Heavy Current Regulations): Supply cords of class I equipment, which is delivered without a plug, must be provided with a visible tag with the following text: Vigtigt! Lederen med grøn/gul isolation må kun tilsluttes en klemme mærket ⏚ eller ⏚ If essential for the safety of the equipment, the tag must in addition be provided with a diagram which shows the connection of the other conductors, or be provided with the following text: "For tilslutning af de øvrige ledere, se medfølgende instalationsvejledning."	Class III equipment.	N/A
1.7.5	S (DK): Socket-outlets for providing power to other equipment shall be in accordance with the Heavy Current Regulations, Section 107-2-D1, Standard Sheet DK 1-3a, DK 1-5a or DK 1-7a, when used on Class I equipment. For stationary equipment the socket-outlet shall be in accordance with Standard Sheet DK 1-1b or DK 1-5a.	Class III equipment.	N/A
1.7.5	A (DK, Heavy Current Regulations): CLASS II EQUIPMENT shall not be fitted with socket-outlets for providing power to other equipment.	Class III equipment.	N/A
1.7.12	A (DE, Gesetz über techische Arbeitsmittel (Gerätesicherheitsgesetz) [Law on technical labour equipment {Equipment safety law}], of 23rd October 1992, Article 3, 3rd paragraph, 2nd sentence, together with the "Allgemeine Verwaltungsvorschrift zur Durchführung des Zweiten Abschnitts des Gerätesicherheits-gesetzes" [General administrative regulation on the execution of the Second Section of the Equipment safety law], of 10th January 1996, article 2, 4th paragraph item 2): Directions for use with rules to prevent certain hazards for (among others) maintenance of the technical labour equipment, also for imported technical labour equipment shall be written in the German language. NOTE: Of this requirement, rules for use even only by service personnel are not exempted.	Must be considered before marketed in Germany.	—
1.7.15	A (CH, Ordinance on environmentally hazardous substances SR 814.013): Annex 4.10 of SR 814.013 applies for batteries.	There is no battery containing Cd or Hg in the equipment.	N/A
	A (DE, Regulation on protection against hazards	This national difference was	N/A

EN 60950-1			
Cl.	Requirement – Test	Result	Verdict
	by X-ray, of 8th January 1987, Article 5 [Operation of X-ray emission source], clauses 1 to 4): a) A licence is required by those who operate an X-ray emission source. b) A licence in accordance with Cl. 1 is not required by those who operate an X-ray emission source on which the electron acceleration voltage does not exceed 20 kV if 1) the local dose rate at a distance of 0,1 m from the surface does not exceed 1 µSv/h and 2) it is adequately indicated on the X-ray emission source that i) X-rays are generated and ii) the electron acceleration voltage must not exceed the maximum value stipulated by the manufacturer or importer. c) A licence in accordance with Cl. 1 is also not required by persons who operate an X-ray emission source on which the electron acceleration voltage exceeds 20 kV if 1) the X-ray emission source has been granted a type approval and 2) it is adequately indicated on the X-ray emission source that i) X-rays are generated ii) the device stipulated by the manufacturer or importer guarantees that the maximum permissible local dose rate in accordance with the type approval is not exceeded and iii) the electron acceleration voltage must not exceed the maximum value stipulated by the manufacturer or importer. d) Furthermore, a licence in accordance with Cl. 1 is also not required by persons who operate X-ray emission sources on which the electron acceleration voltage does not exceed 30 kV if 1) the X-rays are generated only by intrinsically safe CRTs complying with Enclosure III, No. 6,	deleted by A11 of EN 60950-1.	

EN 60950-1			
Cl.	Requirement – Test	Result	Verdict
	2) the values stipulated in accordance with Enclosure III, No. 6.2 are limited by technical measures and specified in the device and 3) it is adequately indicated on the X-ray emission source that the X-rays generated are adequately screened by the intrinsically safe CRT.		
2.2.4	S (NO): Requirements according to this annex, 1.7.2 and 6.1.2.1 apply.	Not applied for.	N/A
2.3.2	S (NO): Requirements according to this annex, 6.1.2.1 apply.	Not applied for.	N/A
2.3.3 and 2.3.4	S (NO): Requirements according to this annex, 1.7.2 and 6.1.2.1 apply.	Not applied for.	N/A
2.6.3.3	S (GB): The current rating of the circuit shall be taken as 13 A, not 16 A.	Class III equipment.	N/A
2.7.1	C: Replace the subclause as follows: *Basic requirements* To protect against excessive current, short-circuits and earth faults in PRIMARY CIRCUITS, protective devices shall be included either as integral parts of the equipment or as parts of the building installation, subject to the following, a), b) and c): a) except as detailed in b) and c), protective devices necessary to comply with the requirements of 5.3 shall be included as parts of the equipment; b) for components in series with the mains input to the equipment such as the supply cord, appliance coupler, r.f.i. filter and switch, short-circuit and earth fault protection may be provided by protective devices in the building installation; c) it is permitted for PLUGGABLE EQUIPMENT TYPE B or PERMANENTLY CONNECTED EQUIPMENT, to rely on dedicated overcurrent and short-circuit protection in the building installation, provided that the means of protection, e.g. fuses or circuit breakers, is fully specified in the installation instructions. If reliance is placed on protection in the building installation, the installation instructions shall so state, except that for PLUGGABLE EQUIPMENT TYPE A the building installation shall be regarded as providing protection in accordance with the rating of the wall socket outlet.	Class III equipment.	N/A

EN 60950-1			
Cl.	Requirement – Test	Result	Verdict
	S (GB): To protect against excessive currents and short-circuits in the PRIMARY CIRCUIT OF DIRECT PLUG-IN EQUIPMENT, protective device shall be included as integral parts of the DIRECT PLUG-IN EQUIPMENT.	Class III equipment.	N/A
2.7.2	C: Void.	Void.	N/A
2.10.2	C: Replace in the first line "(see also 1.4.7)" by "(see also 1.4.8)".	Replaced.	P
2.10.3.1	S (NO): Due to the IT power distribution system used (see annex V, Fig. V.7), the A.C. MAINS SUPPLY voltage is considered to be equal to the line-to-line voltage and will remain at 230 V in case of a single earth fault	Class III equipment.	N/A
3.2.1.1	S (CH): Supply cords of equipment having a RATED CURRENT not exceeding 10 A shall be provided with a plug complying with SEV 1011 or IEC 60884-1 and one of the following dimension sheets: SEV 6532-2.1991, Plug type 15, 3P+N+PE 250/400 V, 10 A SEV 6533-2.1991, Plug type 11, L+N 250 V, 10 A SEV 6534-2.1991, Plug type 12, L+N+PE 250 V, 10 A In general, EN 60309 applies for plugs for currents exceeding 10A. However, a 16 A plug and socket-outlet system is being introduced in Switzerland, the plugs of which are according to the following dimension sheets, published in February 1998: SEV 5932-2.1998, Plug type 25, 3L+N+PE 230/400 V, 16 A SEV 5933-2.1998, Plug type 21, L+N 250 V, 16 A SEV 5934-2.1998, Plug type 23, L+N+PE 250 V, 16 A	Class III equipment.	N/A

EN 60950-1			
Cl.	Requirement – Test	Result	Verdict
	S (DK): Supply cords of single-phase equipment having a rated current not exceeding 13 A shall be provided with a plug according to the Heavy Current Regulations, Section 107-2-D1. CLASS I EQUIPMENT provided with socket-outlets with earth contacts or which are intended to be used in locations where protection against indirect contact is required according to the wiring rules shall be provided with a plug in accordance with standard sheet DK 2-1a or DK 2-5a. If ply-phase equipment and single-phase equipment having a RATED CURRENT exceeding 13 A is provided with a supply cord with a plug, this plug shall be in accordance with the Heavy Current Regulations, Section 107-2-D1 or EN 60309-2.	Ditto.	N/A
	S (ES): Supply cords of single-phase equipment having a rated current not exceeding 10 A shall be provided with a plug according to UNE 20315:1994. Supply cords of single-phase equipment having a rated current not exceeding 2,5 A shall be provided with a plug according to UNE-EN 50075:1993. CLASS I EQUIPMENT provided with socket-outlets with earth contacts or which are intended to be used in locations where protection against indirect contact is required according to the wiring rules, shall be provided with a plug in accordance with standard UNE 20315:1994. If poly-phase equipment is provided with a supply cord with a plug, this plug shall be in accordance with UNE-EN 60309-2.	Ditto.	N/A
	S (GB): Apparatus which is fitted with a flexible cable or cord and is designed to be connected to a mains socket conforming to BS 1363 by means of that flexible cable or cord and plug, shall be fitted with a 'standard plug' in accordance with Statutory Instrument 1768:1994 – The Plugs and Socket etc. (Safety) Regulations 1994, unless exempted by those regulations. NOTE – 'Standard plug' is defined in SI 1768:1994 and essentially means an approved plug conforming to BS 1363 or an approved conversion plug.	Ditto.	N/A

EN 60950-1			
Cl.	Requirement – Test	Result	Verdict
	S (IE): Apparatus which is fitted with a flexible cable or cord and is designed to be connected to a mains socket conforming to I.S. 411 by means of that flexible cable or cord and plug, shall be fitted with a 13 A plug in accordance with Statutory Instrument 525:1997 – National Standards Authority of Ireland (section 28) (13 A Plugs and Conversion Adaptors for Domestic Use) Regulations 1997.	Ditto.	N/A
3.2.3	C: Delete Note 1 and in Table 3A, delete the conduit sizes in parentheses.	Deleted.	P
3.2.5.1	C: Replace "60245 IEC 53" by "H05 RR-F"; "60227 IEC 52" by "H03 VV-F or H03 VVH2-F"; "60227 IEC 53" by "H05 VV-F or H05 VVH2-F2". In Table 3B, replace the first four lines by the following: Up to and including 6 0,75[1)] Over 6 up to and including 10 (0,75)[2)] 1,0 Over 10 up to and including 16 (1,0)[3)] 1,5 In the Conditions applicable to Table 3B delete the words "in some countries" in condition [1)]. In Note 1, applicable to Table 3B, delete the second sentence.	Class III equipment.	N/A
3.2.5.1	S (GB): A power supply cord with conductor of 1,25 mm^2 is allowed for equipment with a rated current over 10 A and up to and including 13 A.	Class III equipment.	N/A
3.3.4	C: In table 3D, delete the fourth line: conductor sizes for 10 to 13A, and replace with the following: "Over 10 up to and including 16 1,5 to 2,5 1,5 to 4 Delete the fifth line: conductor sizes for 13 to 16 A.	Class III equipment.	N/A
3.3.4	S (GB): The range of conductor sizes of flexible cords to be accepted by terminals for equipment with A RATED CURRENT of over 10 A up to and including 13 A is: - 1,25 mm^2 to 1,5 mm^2 nominal cross-sectional area.	Class III equipment.	N/A
4.3.6	S (GB): The torque test is performed using a socket outlet complying with BS 1363 and the plug part OF DIRECT PLUG-IN EQUIPMENT shall be assessed to BS 1363: Part 1, 12.1, 12.2, 12.3, 12.9, 12.11, 12.12, 12.16 and 12.17, except that the test of 12.17 is performed at not less than 125 °C.	Not direct plug-in equipment.	N/A

EN 60950-1			
Cl.	Requirement – Test	Result	Verdict
	S (IE): DIRECT PLUG-IN EQUIPMENT is known as plug similar devices. Such devices shall comply with Statutory Instrument 526:1997 – National Standards Authority of Ireland (Section 28) (Electrical plugs, plug similar devices and sockets for domestic use) Regulations, 1997.	Not direct plug-in equipment.	N/A
4.3.13.6	C: Add the following note: NOTE Attention is drawn to 1999/519/EC: Council Recommendation on the limitation of exposure of the general public to electromagnetic fields 0 Hz to 300 GHz. Standards taking into account this recommendation are currently under development.	No lasers or LED.	N/A
6.1.2.1	S (FI, NO, SE): Add the following text between the first and second paragraph: If this insulation is solid, including insulation forming part of a component, it shall at least consist of either - two layers of thin sheet material, each of which shall pass the electric strength test below, or - one layer having a distance through insulation of at least 0,4 mm, which shall pass the electric strength test below. If this insulation forms part of a semiconductor component (e.g. an optocoupler), there is no distance through insulation requirement for the insulation consisting of an insulating compound completely filling the casing, so that CLEARANCES AND CREEPAGE DISTANCES do not exist, if the component passes the electric strength test in accordance with the compliance clause below and in addition - passes the tests and inspection criteria of 2.10.8 with an electric strength test of 1,5 kV multiplied by 1,6 (the electric strength test of 2.10.7 shall be performed using 1,5 kV), and - is subject to ROUTINGE TESTING for electric strength during manufacturing, using a test voltage of 1,5 kV. It is permitted to bridge this insulation with a capacitor complying with EN 132400:1994, subclass Y2. A capacitor classified Y3 according to EN 132400:1994, may bridge this insulation under the following conditions: - the insulation requirements are satisfied by having a capacitor classified Y3 as defined by	No TNV-circuits provided.	N/A

EN 60950-1			
Cl.	Requirement – Test	Result	Verdict
	EN 132400, which in addition to the Y3 testing, is tested with an impulse test of 2,5 kV defined in EN 60950:2000, 6.2.2.1; - the additional testing shall be performed on all the test specimens as described in EN 132400; - the impulse test of 2,5 kV is to be performed before the endurance test in EN 132400, in the sequence of tests as described in EN 132400.		
6.1.2.2	S (FI, NO, SE): The exclusions are applicable for PERMANENTLY CONNECTED EQUIPMENT and PLUGGABLE EQUIPMENT TYPE B and equipment intended to be used in a RESTRICTED ACCESS LOCATION where equipotential bonding has been applied, e.g. in a telecommunication centre, and which has provision for a permanently connected PROTECTIVE EARTHING CONDUCTOR and is provided with instructions for the installation of that conductor by a service person.	Ditto.	N/A
7.1	S (FI, NO, SE): Requirements according to this annex, 6.1.2.1 and 6.1.2.2 apply with the term TELECOMMUNICATION NETWORK in 6.1.2 being replaced by the term CABLE DISTRIBUTION SYSTEM.	No cable distribution system.	N/A
G.2.1	S (NO): Due to the IT power distribution system used (see annex V, Fig. V.7), the A.C. MAINS SUPPLY voltage is considered to be equal to the line-to-line voltage, and will remain at 230 V in case of a single earth fault.	Class III equipment.	N/A
Annex H	C: Replace the last paragraph of this annex by: At any point 10 cm from the surface of the operator access area, the dose rate shall not exceed 1 μSv/h (0,1 mR/h) (see note). Account is taken of the background level. Replace the notes as follows: NOTE These values appear in Directive 96/29/Euratom. Delete Note 2.	Replaced.	P
Annex P	C: Replace the text of this annex by: See annex ZA.	Replaced.	P

EN 60950-1			
Cl.	Requirement – Test	Result	Verdict
Annex Q	C: Replace the title of IEC 61032 by "Protection of persons and equipment by enclosures – Probes for verification". Add the following notes for the standards indicated: IEC 60127 NOTE Harmonized as EN 60127 (Series) (not modified) IEC 60269-2-1 NOTE Harmonized as HD 630.2.1 S4:2000 (modified) IEC 60529 NOTE Harmonized as EN 60529:1991 (not modified) IEC 61032 NOTE Harmonized as EN 61032:1998 (not modified) IEC 61140 NOTE Harmonized as EN 61140:2001 (not modified) ITU-T Recommendation K.31 NOTE in Europe, the suggested document is EN 50083-1.		P
Annex ZA	C: NORMATIVE REFERENCES TO INTERNATIONAL PUBLICATIONS WITH THEIR RELEVANT EUROPEAN PUBLICATIONS This European Standard incorporates, by dated or undated reference, provisions from other publications. These normative references are cited at the appropriate places in the text and the publications are listed hereafter. For dated references, subsequent amendments to or revisions of any of these publications apply to this European Standard only when incorporated in it by amendment or revision. For undated references, the latest edition of the publication referrd to applies (including amendments). NOTE When an international publication has been modified by common modifications, indicated by (mod), the relevant EN/HD applies.		P
	—	IEC 60050-151	
	—	IEC 60050-195	
	EN 60065:1998 + corr. June 1999	IEC 60065 (mod):1998	
	EN 60073:1996	IEC 60073:1996	
	HD 566 S1:1990	IEC 60085:1984	
	HD 214 S2:1980	IEC 60112:1979	
	HD 611.4.1.S1:1992	IEC 60216-4-1:1990	
	HD 21 [1)] Series	IEC 60227 (mod) Series	
	HD 22 [2)] Series	IEC 60245 (mod) Series	
	EN 60309 Series	IEC 60309 Series	
	EN 60317-43:1997	IEC 60317-43:1997	
	EN 60320 Series	IEC 60320 (mod) Series	
	HD 384.3 S2:1995	IEC 60364-3 (mod):1993	
	HD 384.4.41 S2:1996	IEC 60364-4-41 (mod):1992 [3)]	
	EN 132400:1994 [4)] + A2:1998 + A3:1998 + A4:2001	IEC 60384-14:1993	
	EN 60417-1	IEC 60417-1	
	HD 625.1 S1:1996 + corr. Nov. 1996	IEC 60664-1 (mod):1992	
	EN 60695-2-2:1994	IEC 60695-2-2:1991	
	EN 60695-2-11:2001	IEC 60695-2-11:2000	

EN 60950-1			
Cl.	Requirement – Test	Result	Verdict
	—	IEC 60695-2-20:1995	
	—	IEC 60695-10-2:1995	
	—	IEC 60695-11-3:2000	
	—	IEC 60695-11-4:2000	
	EN 60695-11-10:1999	IEC 60695-11-10:1999	
	EN 60695-11-20:1999	IEC 60695-11-20:1999	
	EN 60730-1:2000	IEC 60730-1:1999 (mod)	
	EN 60825-1:1994 + corr. Febr. 1995 + A11:1996 + corr. July 1997	IEC 60825-1:1993	
	EN 60825-2:2000	IEC 60825-2:2000	
	—	IEC 60825-9:1999	
	EN 60851-3:1996	IEC 60851-3:1996	
	EN 60851-5:1996	IEC 60825-5:1996	
	EN 60851-6:1996	IEC 60851-6:1996	
	—	IEC 60885-1:1987	
	EN 60990:1999	IEC 60990:1999	
	—	IEC 61058-1:2000	
	EN 61965:2001	IEC 61965:2000	
	EN ISO 178:1996	ISO 178:1993	
	EN ISO 179 Series	ISO 179 Series	
	EN ISO 180:2000	ISO 180:1993	
	—	ISO 261:1998	
	—	ISO 262:1998	
	EN ISO 527 Series	ISO 527 Series	
	—	ISO 386:1984	
	EN ISO 4892 Series	ISO 4892 Series	
	—	ISO 7000:1989	
	EN ISO 8256:1996	ISO 8256:1990	
	—	ISO 9772:1994	
	EN ISO 9773:1998	ISO 9773:1998	
	—	ITU-T:1988 Recommendation K.17	
	—	ITU-T:2000 Recommendation K.21	

EN 60950-1			
Cl.	Requirement – Test	Result	Verdict
	1) The HD 21 series is related to, but not directly equivalent with the IEC 60227 series 2) The HD 22 series is related to, but not directly equivalent with the IEC 60245 series 3) IEC 60364-4-41:1992 is superseded by IEC 60364-4-41:2001 4) EN 132400, Sectional Specification: Fixed capacitors for electromagnetic interference suppression and connection to the supply mains (Assessment level D), and its amendments are related to, but not directly equivalent to IEC 60384-14		

EN 60950-1			
Cl.	Requirement – Test	Result	Verdict

1.5.1	TABLE: list of critical components				P
object/part No.	manufacturer/ trademark	type/model	technical data	standard	mark(s) of conformity[1])
Enclosure	Various	Various	V-0	--	UL
PCB	Various	Various	V-1, 130°C	--	UL
[1]) an asterisk indicates a mark which assures the agreed level of surveillance *1)* Breaking time of all fuses when load with a current equal to 210% of the specified current rating are <120s.					

2.1.1.5	TABLE: energy hazard test			N/A
Voltage (rated) (V)	Current (rated) (A)	Voltage (max) (V)	Current (max.) (A)	VA (max.) (VA)
No energy hazard.				

2.1.1.7	TABLE : discharge test			N/A
Condition	τ(s)	T measured (s)	tu → 0v (s)	comments
Note(s): Test voltage: Overall capacity: Discharge resistor:				

2.2.2	TABLE: Hazardous voltage measurement			N/A
Connector	Location	Max. Voltage		Voltage limitation component
		Vpeak	Vd.c	

2.2.3	TABLE: SELV voltage measurement		P
Location	Voltage (V)	Comments	
Input--output	5V	Max load	

2.4.2	TABLE: limited current circuit measurement					N/A
Location	Voltage (V)	Current (mA)	Freq. (Hz)	Limit (mA)	Comments	
Output measured with an 2kΩ resistor as load.						
2.5	TABLE: limited power source measurement					N/A

EN 60950-1			
Cl.	Requirement – Test	Result	Verdict

2.4.2	TABLE: limited current circuit measurement					N/A
Location	Voltage (V)	Current (mA)	Freq. (Hz)	Limit (mA)	Comments	

	Limits	Measured	Verdict
According to Table 2B (normal condition)			
current (in A)			Pass
apparent power (in VA)			Pass
According to Table 2B (Abnormal condition)			
current (in A)			Pass
apparent power (in VA)			Pass
Note(s):			

2.6.3.3	TABLE : ground continue test (Class Ⅲ without test)	N/A
Location	Resistance measured (mΩ)	
--	--	--

2.10.2	TABLE : working voltage measurement			N/A
Location	RMS Voltage (V)	--	Comments	
--	--	--	--	
Input voltage:				

2.10.3 and 2.10.4	TABLE: clearance and creepage distance measurements					N/A
clearance cl and creepage distance dcr at/of:	Up (V)	--	required cl (mm)	cl (mm)	required dcr (mm)	dcr (mm)
Note: Class III equipment not demand						

2.10.5	TABLE: distance through insulation measurements			N/A
distance through insulation di at/of:	U r.m.s. (V)	test voltage (V)	required di (mm)	di (mm)
--	--	--	--	--
Note: Class III equipment not demand				

EN 60950-1			
Cl.	Requirement – Test	Result	Verdict

4.3.8	TABLE: batteries								N/A
The tests of 4.3.8 are applicable only when appropriate battery data is not available						--			--
Is it possible to install the battery in a reverse polarity position?						--			--
	Non-rechargeable batteries			Rechargeable batteries					
	Discharging		Un-intentional charging	Charging		Discharging		Reversed charging	
	Meas. current	Manuf. Specs.		Meas. current	Manuf. Specs.	Meas. current	Manuf. Specs.	Meas. current	Manuf. Specs.
Max. current during normal condition	--	--	--	--	--	--	--	--	--
Max. current during fault condition	--	--	--	--	--	--	--	--	--
Test results:						Test result			Verdict
- Chemical leaks						--			N/A
- Explosion of the battery						--			N/A
- Emission of flame or expulsion of molten metal						--			N/A
- Electric strength tests of equipment after completion of tests						--			N/A
Supplementary information:									

4.5.1	TABLE: temperature rise measurements			P
	test voltage (V)	5Vdc		—
	t1 (°C)	25.0		—
	t2 (°C)	25.5		—
rise T of part/at:		T (°C)		allowed T (°C)
Test Voltage:		5V	--	
Enclosure inside		33.2	--	90
Enclosure outside		30.7	--	90
PCB		41.2	--	Ref
Ambient		25.0	--	--

EN 60950-1			
Cl.	Requirement – Test	Result	Verdict

Note:
Having a specified maximum ambient temperature of 45°C for charging, 60°C for discharging. If no limit is stated, temperature is for reference only. Temp. limits are adjusted according to Cl. 1.4.12.3.

4.5.2	TABLE: ball pressure test of thermoplastic parts		P
	allowed impression diameter (mm) .....:	≤ 2 mm	—
Part		test temperature (°C)	impression diameter (mm)
Enclosure		75	0.86
---		--	-

5.1.6	TABLE: Touch current measurement				N/A
Condition	L- terminal A (mA)	N-terminal A (mA)	Limit (mA)	Comments	
Inputvoltage: Input frequency: Overall capacity: --					

5.2	TABLE: electric strength tests, impulse tests and voltage surge tests		P
test voltage applied between:		test voltage (V) a.c. / d.c.	breakdown Yes / No
Input –output		DC500V	No
supplementary information			
Note:			

EN 60950-1			
Cl.	Requirement – Test	Result	Verdict

5.3	TABLE: fault condition tests		P
	ambient temperature (°C) .....:	25.0°C	—
	model/type of power supply .....:	See the first page	—
	manufacturer of power supply .....:	See the first page	—
	rated markings of power supply .....:	See the first page	—

com-ponent No.	fault	test voltage (V)	test time	fuse No.	fuse current (A)	result
E2	s-c	5	10min	--	--	Unit shut down immediately, no damage, no hazards
--	--	--	--	--	--	--
supplementary information						
1) s-c = short circuit; o-c = open circuit; o-l = overload.						

ANNEX A

IEC 60950-1, GROUP DIFFERENCES (CENELEC common modifications EN)			
Differences according to .....:EN 60950-1:2006/A11:2009/A1:2010/A12:2011			
Clause	Requirements + Test	Result-Remark	Verdict
Contents	Add the following annexes: Annex ZA (normative) Normative references to international Publications with their corresponding European Publications Annex ZB (normative) Special national conditions		P
General	Delete all the country notes in the reference document (IEC 60950-1:2005) according to the following list: 1.4.8 Note 2 1.5.1 Note 2 & 3 1.5.7.1 Note 1.5.8 Note 2 1.5.9.4 Note 1.7.2.1 Note 4, 5 & 6 2.2.3 Note 2.2.4 Note 2.3.2 Note 2.3.2.1 Note 2 2.3.4 Note 2 2.6.3.3 Note 2 & 3 2.7.1 Note 2.10.3.2 Note 2 2.10.5.13 Note 3 3.2.1.1 Note 3.2.4 Note 3. 2.5.1 Note 2 4.3.6 Note 1 & 2 4.7 Note 4 4.7.2.2 Note 4.7.3.1Note 2 5.1.7.1 Note 3 & 4 5.3.7 Note 1 6 Note 2 & 5 6.1.2.1 Note 2 6.1.2.2 Note 6.2.2 Note 6.2.2.1 Note 2 6.2.2.2 Note 7.1 Note 3 7.2 Note 7.3 Note 1 & 2 G.2.1 Note 2 Annex H Note 2		P
General (A1:2010)	Delete all the country notes in the reference documents (IEC 60850-1:2005/A1:2010) according to the following list: 1.5.7.1 Note 6.1.2.1 Note 2 6.2.2.1 Note2 EE.3 Note		P

IEC 60950-1, GROUP DIFFERENCES (CENELEC common modifications EN)			
Clause	Requirements + Test	Result-Remark	Verdict
1.3.Z1	Add the following subclause: 1.3.Z1 Exposure to excessive sound pressure The apparatus shall be so designed and constructed as to present no danger when used for its intended purpose, either in normal operating conditions or under fault conditions, particularly providing protection against exposure to excessive sound pressures from headphones or earphones.		N/A
1.7.2.1 (A1:2010)	In addition , for a portable sound system , the instructions shall include a warning that excessive sound pressure from earphone and headphone can cause hearing loss.		N/A
1.7.2.1 (A12:2011)	In EN 60950-1:2006/A12:2011 Delete Note Z1 and the addition for portable sound System. Add the following clause and annex to the existing Standard and amendments. **ZX Protection against excessive sound pressure from personal music player**		N/A
	ZX.1 General A personal music player is portable equipment for personal use , that: -is designed to allow the user to listen to recorded or broadcast sound or video; and -primarily uses headphones or earphones that can be worn in or on or around while in use. A personal music player and earphone or headphones intended to be used with personal music player shall comply with the requirements of this sub-clause. The requirements in this sub-clause are valid for music or video mode only.		N/A
	For equipment which is clearly designed or intended for use by young children, the limits of EN 71-1 apply.		N/A
	Zx.2 Equipment requirements No safety provision is required for equipment that complies with the following: -equipment provided as a package (personal music player with its listening device),where the acoustic output LAeq,T is ≤ 85 dBA measured while playing the fixed programme simulate noise as described in En 50332-1; and -a personal music player provided with an analogue electrical output socket for listening device, where the electrical output is ≦27mV measured as		N/A

EN 60950-1			
Cl.	Requirement – Test	Result	Verdict

IEC 60950-1, GROUP DIFFERENCES (CENELEC common modifications EN)			
Clause	Requirements + Test	Result-Remark	Verdict
	Described in EN 50332-1. All other equipment shall: a) protect the user from unintentional acoustic outputs exceeding those mentioned above; and b) have a standard acoustic output level not exceeding those mentioned above, and c) Provide a means to actively inform the user of the increased sound pressure when the equipment is operated with an acoustic output exceeding those mentioned above. Any means used shall be acknowledged by the user before activating a mode of operation which allows for an acoustic output exceeding those mentioned above. The acknowledged does not need to be repeated more than once every 20h of cumulative listening time. d) have a waring as specified in Zx.3;and e) not exceed the following: 1)equipment provided as package (player with its listening device),the acoustic output shall be ⩽ 100 dBA measured while playing the fixed "programme simulation noise" described in EN 50332-1; and 2) a personal music player provided with an analogue electrical output socket for a listening device, the electrical output shall be ⩽150 mV measured as described in EN 50332-2, while playing the fixed "programme simulation noise" described in EN 50332-1.		N/A
	Zx.3 Warning The warning shall be placed on the equipment, or on the packaging, or in the instruction manual and shall consist of the following: the symbol of Figure 1 with a minimum height of 5 mm; and the following wording, or similar: "To prevent possible hearing damage, do not listen at high volume levels for long periods." **Figure 1 – Warning label (IEC 60417-6044)**		N/A

EN 60950-1			
Cl.	Requirement – Test	Result	Verdict

IEC 60950-1, GROUP DIFFERENCES (CENELEC common modifications EN)			
Clause	Requirements + Test	Result-Remark	Verdict
	Alternatively, the entire warning may be given through the equipment display during use, when the user is asked to acknowledge activation of the higher level.		N/A
	Zx.4 Requirements for listening devices (headphones and earphones)	No earphone with the equipment.	N/A
	Zx.4.1 Wired listening devices with analogue input With 94 dBA sound pressure output LAeq,T, the input voltage of the fixed "programme simulation noise" described in EN 50332-2 shall be ⩾75 mV. This requirement is applicable in any mode where the headphones can operate (active or passive), including any available setting (for example built-in volume level control).		N/A
	Zx.4.2 Wired listening devices with digital Input With any playing device playing the fixed "programme simulation noise" described in EN 50332-1 (and respecting the digital interface standards, where a digital interface standard exists that specifies the equivalent acoustic level), the acoustic output LAeq,T of the listening device shall be ⩽100 dBA.		N/A
	Zx.4.3 Wireless listening devices In wireless mode: with any playing and transmitting device playing the fixed programme simulation noise described in EN 50332-1; andrespecting the wireless transmission standards,where an air interface standard exists that specifies the equivalent acoustic level; and with volume and sound settings in the listening device (for example built-in volume level control, additional sound feature like equalization, etc.) set to the combination of positions that maximize the measured acoustic output for the abovementioned programme simulation noise, the acoustic output LAeq,T of the listening device shall be ⩽ 100 dBA.		NA
	Zx.5 Measurement methods Measurements shall be made in accordance with EN 50332-1 or EN 50332-2 as applicable. Unless stated otherwise, the time interval T shall be 30 s.		N/A

ANNEX A:

Photo-documentation

Photo 1 General appearance of EUT

Photo 2 General appearance of EUT

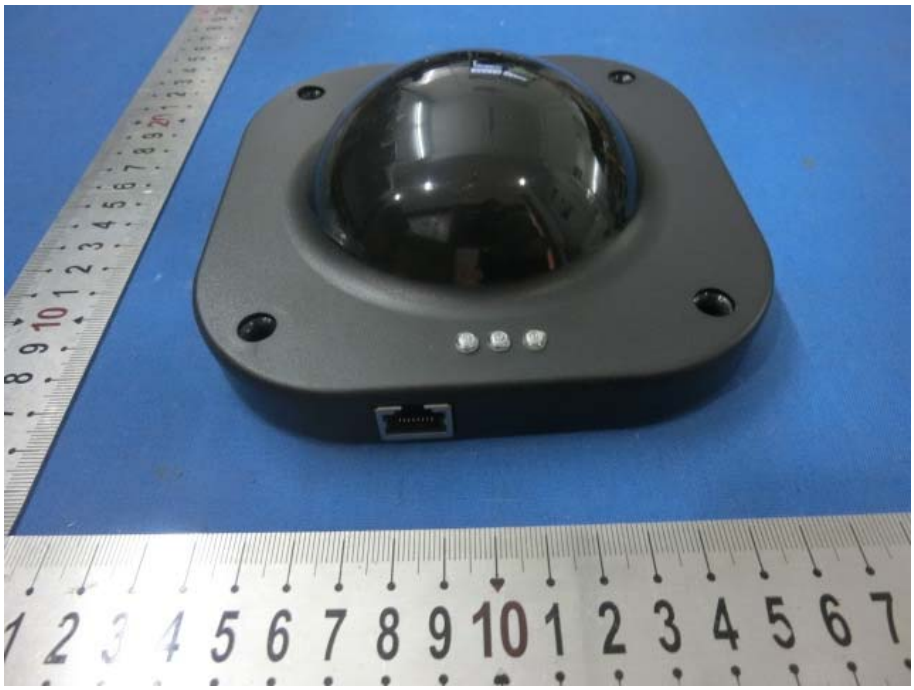

Photo 3 General appearance of EUT

Photo 4 General appearance of EUT

Photo 5 General appearance of EUT

Photo 6 General appearance of EUT

Photo 7 General appearance of EUT

Photo 8 General appearance of EUT

Photo 9 General appearance of EUT

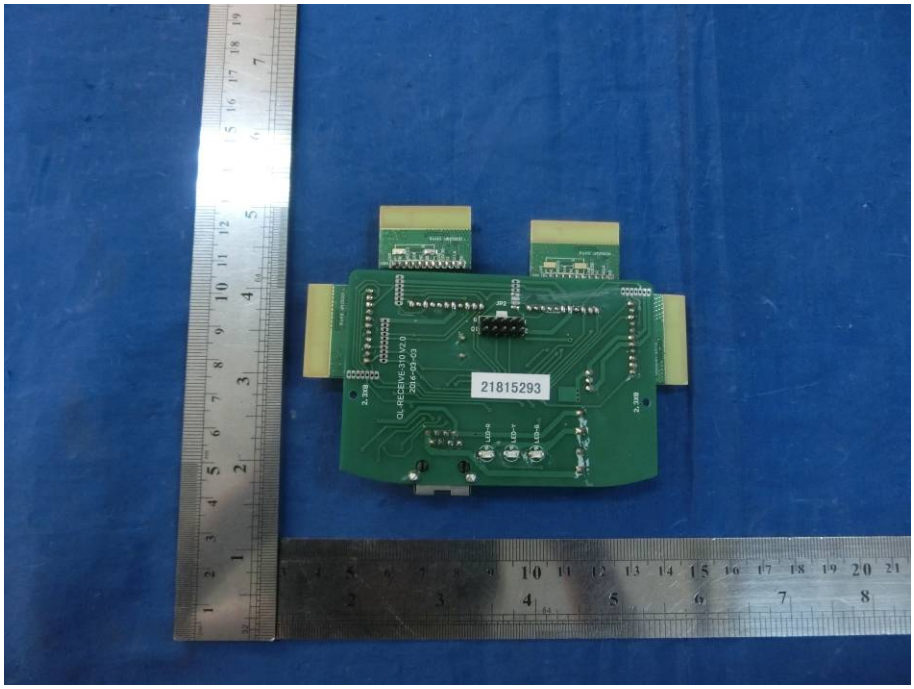

Photo 10 General appearance of EUT

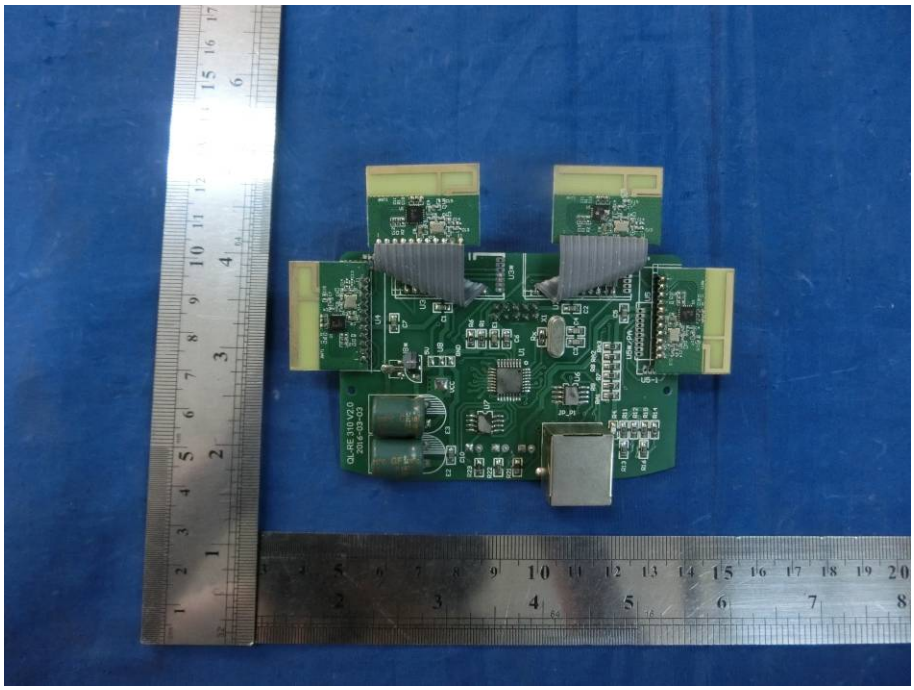

ENJOY TECHNOLOGY CO., LIMITED

CE EMC REPORT

Prepared For :	ENJOY TECHNOLOGY CO., LIMITED UNIT 04, 7/F BRIGHT WAY TOWER NO.33 MONG KOK RD KL
Product Name:	AUDIENCE RESPONSE SYSTEM
Trade Name:	Quiz ENJOY TECH
Model :	217, 218, 219, 207, 237, 238, 317, 319, 419, 229, RF219 VoteWorks Engage
Prepared By :	Shenzhen BST Technology Co., Ltd. Building No.23-24, Zhiheng Industrial Park, Guankouer Road, Nantou,Nanshan District,Shenzhen,Guangdong,China
Test Date:	Sep. 21-23, 2016
Date of Report :	Sep. 23, 2016
Report No.:	BSTDG1611656400001ER-1

TABLE OF CONTENT

Description Page

Test Report Declaration

1.GENERAL INFORMATION 6

1.1. Description of Device (EUT) 6
1.2. Test Facility 7
1.3. Test Uncertainty 7

2. TEST INSTRUMENT USED 8

2.1. For Conducted Emission Test 8
2.2. For Radiated Emission Measurement 8
2.3. For Harmonic / Flicker Test 8
2.4. For Electrostatic Discharge Immunity Test 8
2.5. For RF Strength Susceptibility Test 9
2.6. For Electrical Fast Transient/Burst Immunity Test 9
2.7. For Surge Test 9
2.8. For Injected Currents Susceptibility Test 9
2.9. For Magnetic Field Immunity Test 9
2.10. For Voltage Dips and Interruptions Test 9

3. POWER LINE CONDUCTED EMISSION TEST 10

3.1. Block Diagram of Test Setup 10
3.2. Test Standard 10
3.3. Power Line Conducted Emission Limit 10
3.4. EUT Configuration on Test 10
3.5. Operating Condition of EUT 11
3.6. Test Procedure 11
3.7. Test result 11

4. RADIATED EMISSION TEST 12

4.1. Block Diagram of Test Setup 12
4.2. Test Standard 12
4.3. Radiated Emission Limit 13
4.4. EUT Configuration on Test 13
4.5. Operating Condition of EUT 13
4.6. Test Procedure 13
4.7. Test Data 13

5. HARMONIC CURRENT EMISSION TEST 16

5.1. Block Diagram of Test Setup 16
5.2. Test Standard 16
5.3. Operating Condition of EUT 16
5.4. Test Procedure 17
5.5. Test Results 17

6. VOLTAGE FLUCTUATIONS & FLICKER TEST 18

6.1. Block Diagram of Test Setup 18
6.2. Test Standard 18
6.3. Operating Condition of EUT 18

6.4. Test Results 18
7. ELECTROSTATIC DISCHARGE TEST 19
7.1. Block Diagram of Test Setup 19
7.2. Test Standard 19
7.3. Severity Levels and Performance Criterion 19
7.4. EUT Configuration on Test 20
7.5. Operating Condition of EUT 20
7.6. Test Procedure 20
7.7. Test Results 20
8. RF FIELD STRENGTH SUSCEPTIBILITY TEST 22
8.1. Block Diagram of Test Setup 22
8.2. Test Standard 22
8.3. Severity Levels and Performance Criterion 22
8.4. EUT Configuration on Test 23
8.5. Operating Condition of EUT 23
8.7. Test Results 23
9. ELECTRICAL FAST TRANSIENT/BURST TEST 25
9.1. Block Diagram of Test Setup 25
9.2. Test Standard 25
9.3. Severity Levels and Performance Criterion 25
9.4. EUT Configuration on Test 26
9.5. Operating Condition of EUT 26
9.6. Test Procedure 26
9.7. Test Results 26
10. SURGE TEST 28
10.1. Block Diagram of Test Setup 28
10.2. Test Standard 28
10.3. Severity Levels and Performance Criterion 28
10.4. EUT Configuration on Test 29
10.5. Operating Condition of EUT 29
10.6. Test Procedure 29
10.7. Test Results 29
11. INJECTED CURRENTS SUSCEPTIBILITY TEST 31
11.1. Block Diagram of Test Setup 31
11.2. Test Standard 31
11.3. Severity Levels and Performance Criterion 32
11.4. EUT Configuration on Test 32
11.5. Operating Condition of EUT 32
11.6. Test Procedure 32
11.7. Test Results 32
12. VOLTAGE DIPS AND INTERRUPTIONS TEST 34
12.1. Block Diagram of Test Setup 34
12.2. Test Standard 34
12.3. Severity Levels and Performance Criterion 35
12.4. EUT Configuration on Test 35
12.5. Operating Condition of EUT 35
12.6. Test Procedure 35
12.7. Test Result 35

TEST REPORT DECLARATION

Applicant : ENJOY TECHNOLOGY CO., LIMITED
Manufacturer : GUANGZHOU QILE TECHNOLOGY CO., LTD
EUT Description : AUDIENCE RESPONSE SYSTEM
MODEL NO : 217, 218, 219, 207, 237, 238, 317, 319, 419, 229, RF219 VoteWorks Engage
(Note: The series products have the same circuit diagram, PCB layout and functionality. The differences are the model name and appearance, so, we select 217 to test.)

(A) SERIAL NO. : N/A
(B) Remark : N/A

Test Procedure Used:
ETSI EN 301 489-3 V1.6.1:2013
ETSI EN 301 489-1 V1.9.2:2011

The device described above is tested by us to determine the maximum emission levels emanating from the device, the severe levels which the device can endure and EUT's performance criterion. The test results are contained in this test report. Shenzhen BST Technology Co., Ltd. .is assumed of full responsibility for the accuracy and completeness of these tests. Also, this report shows that the EUT is technically compliant with the ETSI EN 301 489-3 V1.6.1:2013, ETSI EN 301 489-1 V1.9.2:2011 requirements.
This report applies to above tested sample only and shall not be reproduced in part without written approval of Shenzhen BST Technology Co., Ltd.

Prepared by :	Grace Assistant
Tested by:	Jane.zhu Test Engineer
Reviewer :	Diy Supervisor
Approved & Authorized Signer :	SHENZHEN BST TECHNOLOGY CO.,LTD. APPROVED Andrew. Shu / Manager

1.GENERAL INFORMATION

1.1.Description of Device (EUT)

Description	:	AUDIENCE RESPONSE SYSTEM
Model Number	:	217, 218, 219, 207, 237, 238, 317, 319, 419, 229, RF219 VoteWorks Engage
Applicant	:	ENJOY TECHNOLOGY CO., LIMITED UNIT 04, 7/F BRIGHT WAY TOWER NO.33 MONG KOK RD KL
Manufacturer	:	GUANGZHOU QILE TECHNOLOGY CO., LTD 3/F and 4/F, 3#, Nanbian street, Dayuan Nan Road, Baiyun District, Guangzhou, Guangdong Province, China
Date of Test	:	Sep. 21-23, 2016

1.2.Test Facility

Site Description

EMC Lab.	:	Certificated by TUV,TIMCO
Name of Firm	:	Shenzhen BST Technology Co.,Ltd.
Site Location	:	Building No.23-24, Zhiheng Industrial Park, Guankouer Road, Nantou,Nanshan District,Shenzhen,Guangdong,China

1.3.Test Uncertainty

Conducted Emission Uncertainty	=	±2.66dB
Radiated Emission Uncertainty	=	±4.26dB

2. TEST INSTRUMENT USED

2.1.For Conducted Emission Test

Item	Equipment	Manufacturer	Model No.	Serial No.	Last Cal.	Cal. Interval
1.	Test Receiver	Rohde & Schwarz	ESHS30	828985/018	Jun. 01, 16	1 Year
2.	Pulse Limiter	Rohde & Schwarz	ESH3-Z2	100006	Jun. 01, 16	1 Year
3.	L.I.S.N.	Rohde & Schwarz	ESH2-Z5	834549/005	Jun. 01, 16	1 Year
4.	Conical	Emtek	N/A	N/A	N/A	N/A
5.	Voltage Probe	Schwarzbeck	TK9416	N/A	Jun. 01, 16	1 Year
6.	Coaxial Switch	Anritsu	MP59B	6100214550	Jun. 01, 16	1 Year

2.2.For Radiated Emission Measurement

Item	Equipment	Manufacturer	Model No.	Serial No.	Last Cal.	Cal. Interval
1.	Spectrum Analyzer	ANRITSU	MS2661C	6200140915	Jun 01,16	1 Year
2.	Test Receiver	Rohde&Schwarz	ESC830	828982/018	Jun 01,16	1 Year
3.	Bilog Antenna	Schwarzbeck	VULB9163	142	Jun 01,16	1 Year
4.	50 Coaxial Switch	Anritsu Corp	MP59B	6100237248	Jun 01,16	1 Year
5.	Cable	Schwarzbeck	AK9513	ACRX1	Jun 01,16	1 Year
6.	Cable	Rosenberger	N/A	FR2RX2	Jun 01,16	1 Year
7.	Cable	Schwarzbeck	AK9513	CRRX2	Jun 01,16	1 Year
8.	Cable	Schwarzbeck	AK9513	CRRX2	Jun 01,16	1 Year
9.	Signal Generator	HP	864A	3625U00573	Jun 01,16	1 Year

2.3.For Harmonic / Flicker Test

Item	Equipment	Manufacturer	Model No.	Serial No.	Last Cal.	Cal. Interval
1.	Power Frequency test system	HAEFELY	PHF555	080419-03	Jun. 01, 16	1 Year

2.4.For Electrostatic Discharge Immunity Test

Item	Equipment	Manufacturer	Model No.	Serial No.	Last Cal.	Cal. Interval
1.	ESD Tester	HAEFELY	PSD 1600	H911’292	Jun. 02, 16	1 Year

2.5. For RF Strength Susceptibility Test

Item	Equipment	Manufacturer	Model No.	Serial No.	Last Cal.	Cal. Interval
1.	Signal Generator	HP	8648A	3633A02081	Jun. 03, 16	1 Year
2.	Amplifier	A&R	500A100	17034	NCR	NCR
3.	Amplifier	A&R	100W/1000M1	17028	NCR	NCR
4.	Isotropic Field Monitor	A&R	FM2000	16829	NCR	NCR
5.	Isotropic Field Probe	A&R	FP2000	16755	Jun. 03, 16	1 Year
6.	Biconic Antenna	EMCO	3108	9507-2534	NCR	NCR
7.	Log-periodic Antenna	A&R	AT1080	16812	NCR	NCR
8.	PC	N/A	486DX2	N/A	N/A	N/A

2.6.For Electrical Fast Transient/Burst Immunity Test

Item	Equipment	Manufacturer	Model No.	Serial No.	Last Cal.	Cal. Interval
1.	Burst Tester	HAEFELY	PEFT 4010	080981-16	Jun. 01,16	1 Year

2.7.For Surge Test

Item	Equipment	Manufacturer	Model No.	Serial No.	Last Cal.	Cal. Interval
1.	Surge Tester	HAEFELY	PSURGE4.1	080107-04	Jun. 01, 16	1 Year

2.8.For Injected Currents Susceptibility Test

Item	Equipment	Manufacturer	Model No.	Serial No.	Last Cal.	Cal. Interval
1.	Simulator	EMTEST	CWS 500C	0900-12	Jun. 01, 16	1 Year
2.	CDN	EMTEST	CDN-M2	510010010010	Jun. 01, 16	1 Year
3.	VDN	EMTEST	CDN-M3	0900-11	Jun. 01, 16	1 Year
4.	Injection Clamp	EMTEST	F-2031-23MM	368	Jun. 01, 16	1 Year
5.	Attenuator	EMTEST	ATT6	0010222a	Jun. 01, 16	1 Year

2.9.For Magnetic Field Immunity Test

Item	Equipment	Manufacturer	Model No.	Serial No.	Last Cal.	Cal. Interval
1.	Magnetic Field Tester	HEAFELY	MAG100.1	083858-10	Jun. 01, 16	1 Year

2.10.For Voltage Dips and Interruptions Test

Item	Equipment	Manufacturer	Model No.	Serial No.	Last Cal.	Cal. Interval
2.	Dips Tester	HEAFELY	PLINE 1610	083732-18	Jun. 01, 16	1 Year

3. POWER LINE CONDUCTED EMISSION TEST

3.1.Block Diagram of Test Setup

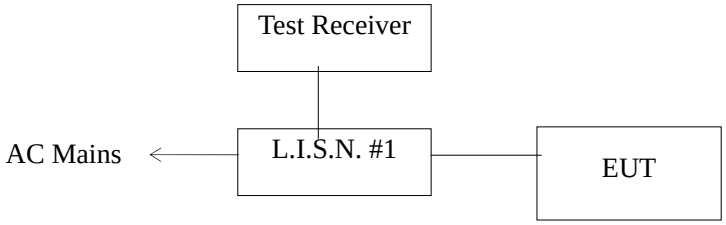

(EUT:AUDIENCE RESPONSE SYSTEM)

3.2.Test Standard

ETSI EN 301 489-3 V1.6.1:2013

3.3.Power Line Conducted Emission Limit

Frequency MHz	Limits dB(μV)	
	Quasi-peak Level	Average Level
0.15 ~ 0.50	66 ~ 56*	56 ~ 46*
0.50 ~ 5.00	56	46
5.00 ~ 30.00	60	50

Notes: 1. *Decreasing linearly with logarithm of frequency.
2. The lower limit shall apply at the transition frequencies.

3.4.EUT Configuration on Test

The following equipments are installed on conducted emission test to meet ETSI EN301 489-3requirement and operating in a manner, which tends to maximize its emission characteristics in a normal application.

3.4.1. *EUT Information*

Model Number : 217
Serial Number : N/A
Manufacturer : GUANGZHOU QILE TECHNOLOGY CO., LTD

3.5.Operating Condition of EUT

3.5.1. Setup the EUT and simulators as shown in Section 3.1.

3.5.2. Turn on the power of all equipments.

3.5.3. Let the EUT work in test modes (EUT Working) and test it.

3.6.Test Procedure

The EUT is put on the ground and connected to the AC mains through a Artificial Mains Network (AMN). This provided 50ohm-coupling impedance for the tested equipments. Both sides of AC line are checked to find out the maximum conducted emission levels according to the ETSI EN301 489-3 regulations during conducted emission test.

The bandwidth of the test receiver (R&S Test Receiver ESHS30) is set at 10KHz.
The EUT is tested in Anechoic Chamber.

3.7. Test result

N/A.

4. RADIATED EMISSION TEST

4.1.Block Diagram of Test Setup

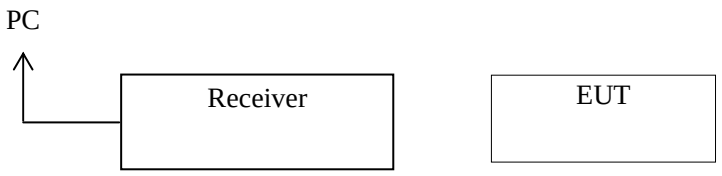

(EUT:AUDIENCE RESPONSE SYSTEM)

4.1.1. Open Site Setup Diagram

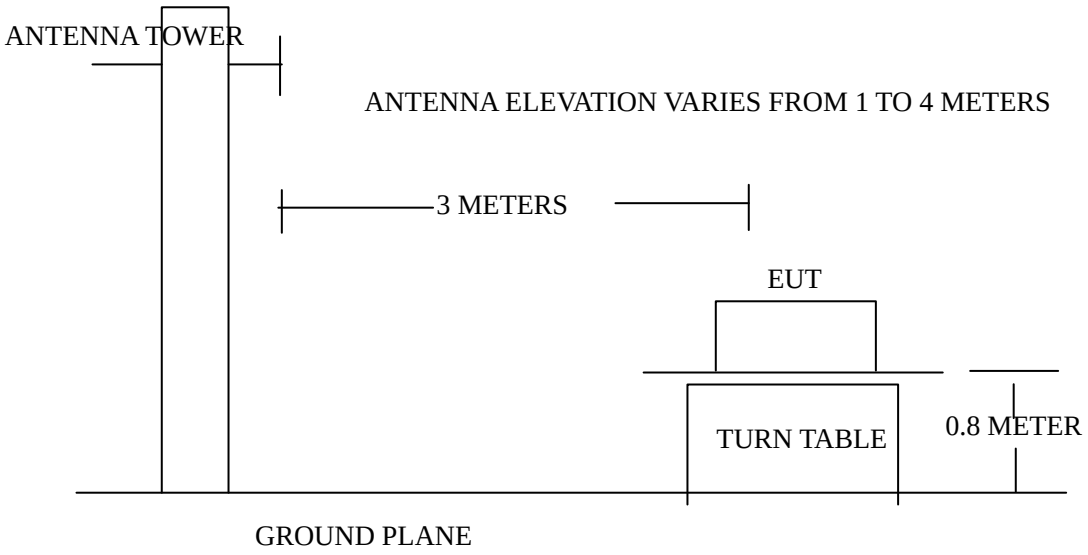

4.2.Test Standard

ETSI EN 301 489-3 V1.6.1:2013

4.3.Radiated Emission Limit

All emanations from a Class B computing devices or system, including any network of conductors and apparatus connected thereto, shall not exceed the level of field strengths specified below:

FREQUENCY (MHz)	DISTANCE (Meters)	FIELD STRENGTHS LIMITS (dBμV/m)
30 ~ 230	3	40
230 ~ 1000	3	47

Note:(1) The tighter limit shall apply at the edge between two frequency bands.
(2) Distance refers to the distance in meters between the measuring instrument antenna and the closed point of any part of the EUT.

4.4.EUT Configuration on Test

Class B regulations test method must be used to find the maximum emission during radiated emission test.

4.5.Operating Condition of EUT

4.5.1. Setup the EUT as shown on Section 3.1.

4.5.2. Turn on the power of all equipments.

4.5.3. Let the EUT work in test mode and measure it.

4.6.Test Procedure

The EUT is placed on a turn table which is 0.8 meter above ground. The turn table can rotate 360 degrees to determine the position of the maximum emission level. The EUT is set 3 meters away from the receiving antenna which is mounted on a antenna tower. The antenna can move up and down between 1 to 4 meters to find out the maximum emission level. Broadband antenna (calibrated by dipole antenna) are used as a receiving antenna. Both horizontal and vertical polarization of the antenna are set on test.
The bandwidth setting on the test receiver (R&S TEST RECEIVER ESCS20) is 120 KHz.
The EUT is tested in Anechoic Chamber. All the test results are listed in Section 4.7.

4.7.Test Data

PASS

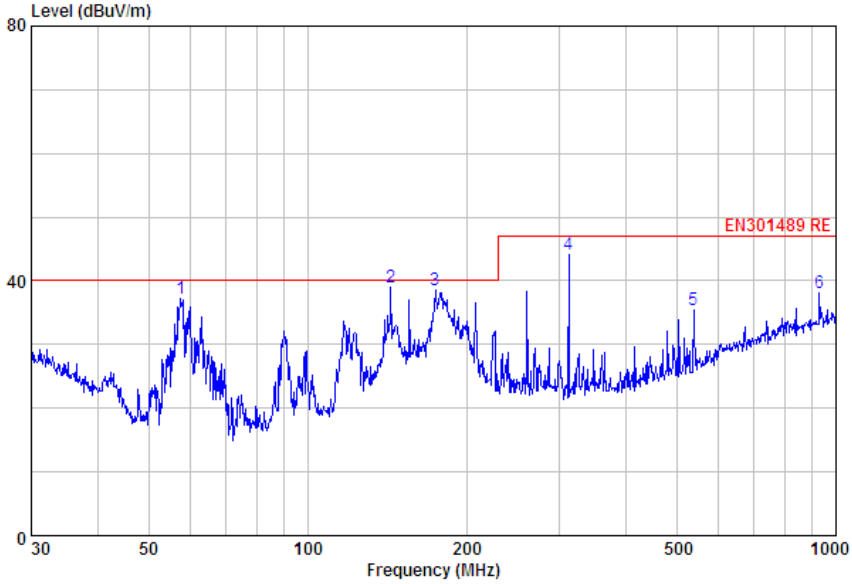

Condition : EN301489 RE 3m HORIZONTAL
: RBW:120.000KHz VBW:300.000KHz SWT:Auto

	Freq	Level	Remark	Pol/Phase	Limit Line	Over Limit
	MHz	dBuV/m			dBuV/m	dB
1	57.594	37.1	Peak	HORIZONTAL	40.0	-2.9
2	143.830	38.9	Peak	HORIZONTAL	40.0	-1.1
3	174.424	38.5	Peak	HORIZONTAL	40.0	-1.5
4	312.179	44.2	Peak	HORIZONTAL	47.0	-2.8
5	537.589	35.5	Peak	HORIZONTAL	47.0	-11.5
6	929.008	38.2	Peak	HORIZONTAL	47.0	-8.8

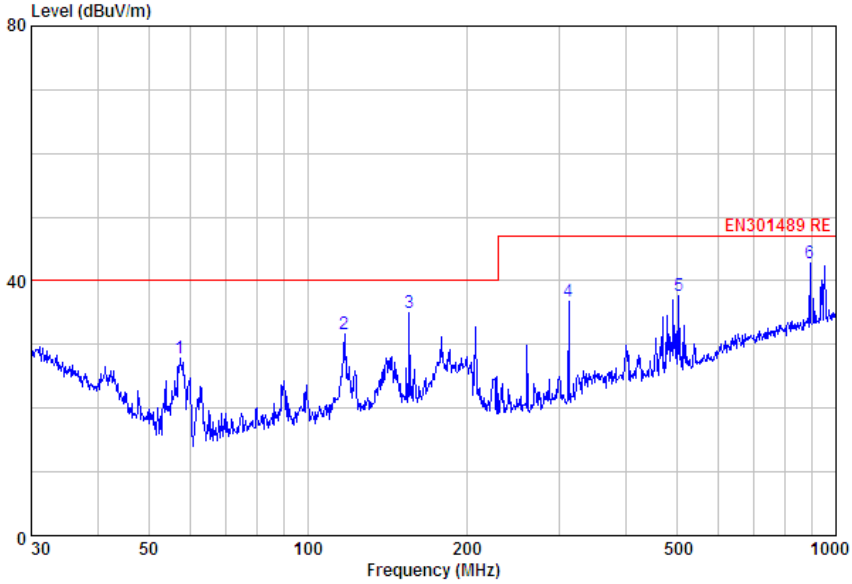

Condition : EN301489 RE 3m VERTICAL
: RBW:120.000KHz VBW:300.000KHz SWT:Auto

	Freq	Level	Remark	Pol/Phase	Limit Line	Over Limit
	MHz	dBuV/m			dBuV/m	dB
1	57.392	27.8	Peak	VERTICAL	40.0	-12.2
2	117.360	31.7	Peak	VERTICAL	40.0	-8.3
3	155.910	35.1	Peak	VERTICAL	40.0	-4.9
4	312.179	36.8	Peak	VERTICAL	47.0	-10.2
5	504.706	37.6	Peak	VERTICAL	47.0	-9.4
6	893.857	42.8	Peak	VERTICAL	47.0	-4.2

5. HARMONIC CURRENT EMISSION TEST

5.1.Block Diagram of Test Setup

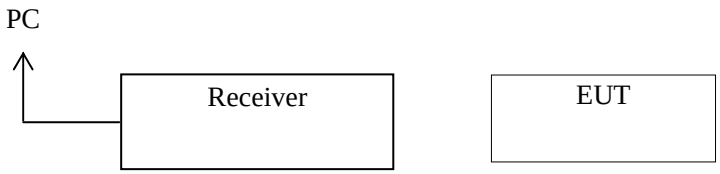

(EUT:AUDIENCE RESPONSE SYSTEM)

5.2.Test Standard

ETSI EN 301 489-3 V1.6.1:2013

5.3.Operating Condition of EUT

Same as Section 3.4. except the test set up replaced by Section 5.1..

5.3.1.Limits

Harmonic Current Test Limit (Class A)

Harmonic order (**n**)	Maximum permissible harmonic current (A)
Odd harmonics	
3	2.30
5	1.14
7	0.77
9	0.40
11	0.33
13	0.21
15≤n≤39	0.15×15/**n**
Even harmonics	
2	1.08
4	0.43
6	0.30
8≤n≤40	0.23×8/**n**

5.4.Test Procedure

The power cord of the EUT is connected to the output of the test system. Turn on the Power of the EUT and use the test system to test the harmonic current level.

5.5.Test Results

N/A.

6. VOLTAGE FLUCTUATIONS & FLICKER TEST

6.1.Block Diagram of Test Setup

Same as Section 5.1..

6.2.Test Standard

ETSI EN 301 489-3 V1.6.1:2013

6.3.Operating Condition of EUT

Same as Section 5.3.. The power cord of the EUT is connected to the output of the test system. Turn on the power of the EUT and use the test system to test the harmonic current level.

Flicker Test Limit

Test items	Limits
Pst	1.0
dc	3.3%
dmax	4.0%
dt	Not exceed 3.3% for 500ms

6.4.Test Results

N/A.

7. ELECTROSTATIC DISCHARGE TEST

7.1.Block Diagram of Test Setup

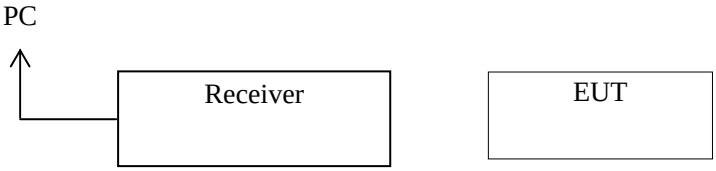

(EUT:AUDIENCE RESPONSE SYSTEM)

7.1.1. Block Diagram of ESD Test Setup

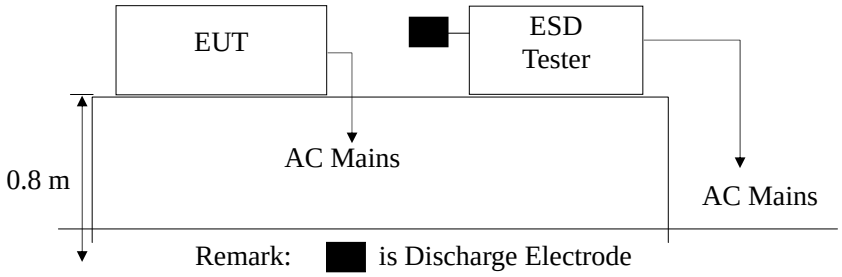

7.2.Test Standard

ETSI EN 301 489-3 V1.6.1:2013
(EN61000-4-2:2009)
Severity Level 3 for Air Discharge at 8KV
Severity Level 2 for Contact Discharge at 4KV

7.3.Severity Levels and Performance Criterion

7.3.1. Severity level

Level	Test Voltage Contact Discharge (KV)	Test Voltage Air Discharge (KV)
1.	2	2
2.	4	4
3.	6	8
4.	8	15
X.	Special	Special

7.3.2. Performance criterion**: B**

7.4.EUT Configuration on Test

The configuration of EUT are listed in Section 3.4..

7.5.Operating Condition of EUT

7.5.1. Setup the EUT as shown in Section 7.1..

7.5.2. Turn on the power of all equipments.

7.5.3. Let the EUT work in test mode (full load) and test it.

7.6.Test Procedure

7.6.1. Air Discharge**:**

This test is done on a non-conductive surfaces. The round discharge tip of the discharge electrode shall be approached as fast as possible to touch the EUT.
After each discharge, the discharge electrode shall be removed from the EUT.
The generator is then re-triggered for a new single discharge and repeated 10 times for each pre-selected test point. This procedure shall be repeated until all the air discharge completed.

7.6.2. Contact Discharge**:**

All the procedure shall be same as Section 7.6.1. except that the tip of the discharge electrode shall touch the EUT before the discharge switch is operated.

7.6.3. Indirect discharge for horizontal coupling plane

At least 20 single discharges shall be applied to the horizontal coupling plane, at points on each side of the EUT. The discharge electrode positions vertically at a distance of 0.1m from the EUT and with the discharge electrode touching the coupling plane.

7.6.4. Indirect discharge for vertical coupling plane

At least 20 single discharge shall be applied to the center of one vertical edge of the coupling plane. The coupling plane, of dimensions 0.5m X 0.5m, is placed parallel to, and positioned at a distance of 0.1m from the EUT. Discharges shall be applied to the coupling plane, with this plane in sufficient different positions that the four faces of the EUT are completely illuminated.

7.7.Test Results

PASS
Please refer to the following page.

Electrostatic Discharge Test Results

Shenzhen BST Technology Co., Ltd.

Date :09/21/2016

Applicant	:	ENJOY TECHNOLOGY CO., LIMITED	Test Date	:	Sep.21,2016
EUT	:	AUDIENCE RESPONSE SYSTEM	Temperature	:	22 ℃
M/N	:	217	Humidity	:	50 %
Power Supply	:	-	Test Mode	:	Full load

Air Discharge: ±8KV For each point positive 10 times and negative 10 times discharge.

Contact Discharge: ±4KV

Location	**Kind** A-Air Discharge C-Contact Discharge	**Result**
Slots	A	PASS
Button	A	PASS
Port	C	PASS
HCP	C	PASS
VCP	C	PASS

Discharge should be considered on Contact and Air and Horizontal Coupling Plane (HCP) and Vertical Coupling Plane (VCP).

8. RF FIELD STRENGTH SUSCEPTIBILITY TEST

8.1.Block Diagram of Test Setup

8.1.1. Block Diagram of the EUT and the simulators

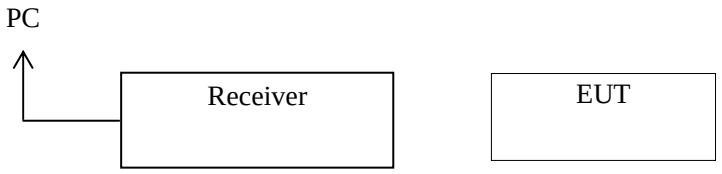

(EUT:AUDIENCE RESPONSE SYSTEM)

8.1.2. R/S Test Setup

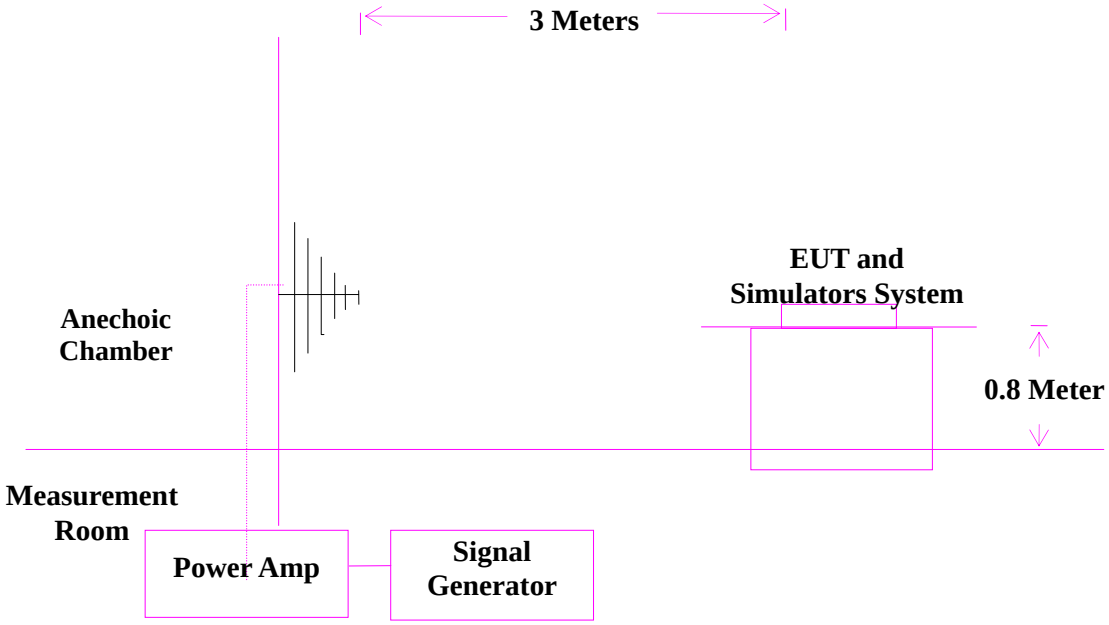

8.2.Test Standard

ETSI EN 301 489-3 V1.6.1:2013 (EN61000-4-3:2006+A1:2008+A2:2010)
Severity Level 2 at 3V / m

8.3.Severity Levels and Performance Criterion

8.3.1. Severity level

Level	Field Strength V/m
1.	1
2.	3
3.	10
X.	Special

8.3.2. Performance criterion **: A**

8.4.EUT Configuration on Test

The configuration of EUT are listed in Section 3.4..

8.5.Operating Condition of EUT

Setup the EUT as shown in Section 8.1.. The operating condition of EUT are listed in section 3.5.

8.6. Test Procedure

The EUT and its simulators are placed on a turn table which is 0.8 meter above the ground. The EUT is set 3 meters away from the transmitting antenna which is mounted on an antenna tower. Both horizontal and vertical polarization of the antenna are set on test. Each of the four sides of EUT must be faced this transmitting antenna and measured individually.

In order to judge the EUT performance, a CCD camera is used to monitor the EUT.

All the scanning conditions are as follows **:**

Condition of Test	Remarks
1. Fielded Strength	3 V/m (Severity Level 2)
2. Radiated Signal	Modulated
3. Scanning Frequency	80 - 1000 MHz, *1.4GHz to 2.7GHz*
4. Sweeping time of radiated	0.0015 decade/s
5. Dwell Time	1 Sec.

8.7. Test Results

PASS

Please refer to the following page.

RF Field Strength Susceptibility Test Results

Shenzhen BST Technology Co., Ltd.

Date :09/21/2016

Applicant	: ENJOY TECHNOLOGY CO., LIMITED	Test Date	: Sep.21,2016
EUT	: AUDIENCE RESPONSE SYSTEM	Temperature	: 22 ℃
M/N	: 217	Humidity	: 50 %
Power Supply	: -	Test Mode	: -

Modulation: ☑AM ☐Pulse ☐none 1 KHz 80%

Criterion : A

	Frequency Rang : 80-1000MHZ, 1.4GHz to 2.7GHz	
Steps	1%	1%
	Horizontal	Vertical
Front	Pass	Pass
Right	Pass	Pass
Rear	Pass	Pass
Left	Pass	Pass

9. ELECTRICAL FAST TRANSIENT/BURST TEST

9.1.Block Diagram of Test Setup

9.1.1. Block Diagram of the EUT

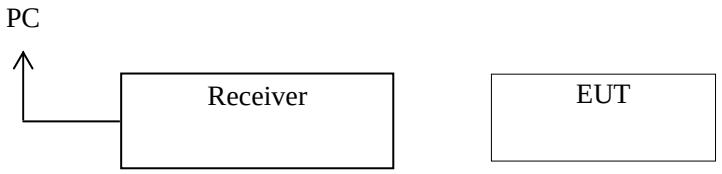

(EUT:AUDIENCE RESPONSE SYSTEM)

9.1.2. EFT Test Setup

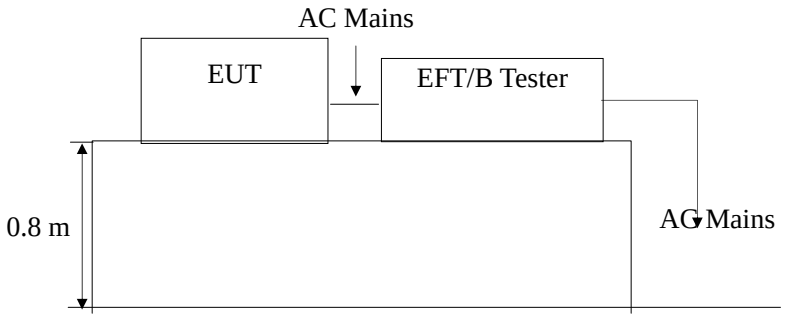

9.2.Test Standard

ETSI EN 301 489-3 V1.6.1:2013 (EN61000-4-4:2012)
Severity Level 2 at 1KV

9.3.Severity Levels and Performance Criterion

9.3.1. Severity level

Open Circuit Output Test Voltage ±10%		
Level	On Power Supply Lines	On I/O (Input/Output) Signal data and control lines
1.	0.5 KV	0.25 KV
2.	1 KV	0.5 KV
3.	2 KV	1 KV
4.	4 KV	2 KV
X	Special	Special

9.3.2. Performance criterion **: B**

9.4.EUT Configuration on Test

The configuration of EUT are listed in Section 3.4..

9.5.Operating Condition of EUT

Setup the EUT as shown in Section 10.1.. The operating condition of EUT are listed in section 3.5.

9.6.Test Procedure

The EUT is put on the table which is 0.8 meter high above the ground. This reference ground plane shall project beyond the EUT by at least 0.1m on all sides and the minimum distance between the EUT and all other conductive structure, except the ground plane beneath the EUT, shall be more than 0.5m.

9.6.1. For input and output AC power ports**:**

The EUT is connected to the power mains by using a coupling device which couples the EFT interference signal to AC power lines. Both polarities of the test voltage should be applied during compliance test and the duration of the test is 2 mins.

9.6.2. For signal lines and control lines ports**:**

It's necessary to test.

9.6.3. For DC output line ports**:**

It's unnecessary to test.

9.7.Test Results

N/A.

Electrical Fast Transient/Burst Test Results

Shenzhen BST Technology Co., Ltd.

Date :09/21/2016

Applicant	: ENJOY TECHNOLOGY CO., LIMITED	Test Date	: Sep.21,2016
EUT	: AUDIENCE RESPONSE SYSTEM	Temperature	: 22 ℃
M/N	: 217	Humidity	: 50 %
Power Supply	: -	Test Mode	: -
Inject Place : AC Mains			

Inject Line	Voltage KV	Inject Time(s)	Inject Method	Results	Inject Line	Voltage KV	Inject Time(s)	Inject Method	Results
L	±1	120	Direct	-					
N	±1	120	Direct	-					
L N	±1	120	Direct	-					
L-PE	±2	120	Direct	-					
N-PE	±2	120	Direct	-					

10. SURGE TEST

10.1. Block Diagram of Test Setup

10.1.1. Block Diagram of the EUT

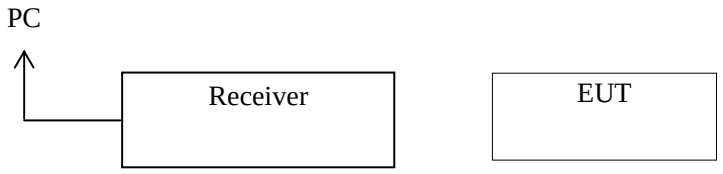

(EUT:AUDIENCE RESPONSE SYSTEM)

10.1.2. Surge Test Setup

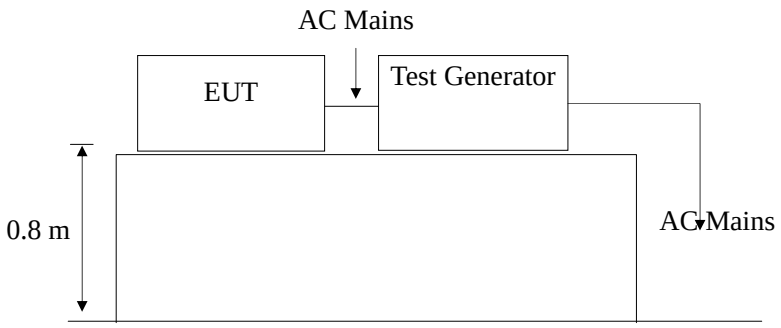

10.2. Test Standard

ETSI EN 301 489-3 V1.6.1:2013 (EN61000-4-5: 2014)
Severity Level 2 for Line to Neutral at 1.0KV

10.3. Severity Levels and Performance Criterion

10.3.1. Severity level

Severity Level	Open-Circuit Test Voltage KV
1	0.5
2	1.0
3	2.0
4	4.0
*	Special

Performance criterion **: B**

10.4.EUT Configuration on Test

The configuration of EUT are listed in Section 3.4..

10.5.Operating Condition of EUT

10.5.1. Setup the EUT as shown in Section 11.1..

10.5.2. Turn on the power of all equipments.

10.5.3. Let the EUT work in test mode (Full load) and test it.

10.6.Test Procedure

1) Set up the EUT and test generator as shown on Section 11.1.2.
2) For line to line coupling mode, provide a 0.5KV 1.2/50us voltage surge (at open-circuit condition) and 8/20us current surge to EUT selected points.
3) At least 5 positive and 5 negative (polarity) tests with a maximum 1/min repetition rate are conducted during test.
4) Different phase angles are done individually.
5) Record the EUT operating situation during compliance test and decide the EUT immunity criterion for above each test.

10.7.Test Results

N/A.

Surge Immunity Test Results

Shenzhen BST Technology Co., Ltd.

Date :09/21/2016

Applicant :	ENJOY TECHNOLOGY CO., LIMITED	Test Date :	Sep.21,2016
EUT :	AUDIENCE RESPONSE SYSTEM	Temperature :	22 ℃
M/N :	217	Humidity :	50 %
Power Supply :	-	Test Mode :	-

Location	Polarity	Phase Angle	No of Pulse	Pulse Voltage (KV)	Result
L-N	+	0	5	1.0	-
L-PE N-PE	+	90	5	2.0	-
	+	180	5	1.0	-
	+	270	5	1.0	-
	-	0	5	1.0	-
	-	90	5	1.0	-
	-	180	5	1.0	-
	-	270	5	1.0	-

11. INJECTED CURRENTS SUSCEPTIBILITY TEST

11.1. Block Diagram of Test Setup

11.1.1. Block Diagram of Test AC Mains

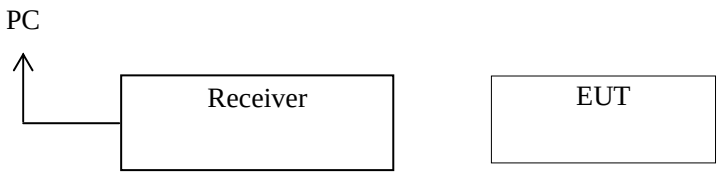

(EUT:AUDIENCE RESPONSE SYSTEM)

11.1.2. Block Diagram of Test AC Mains Setup

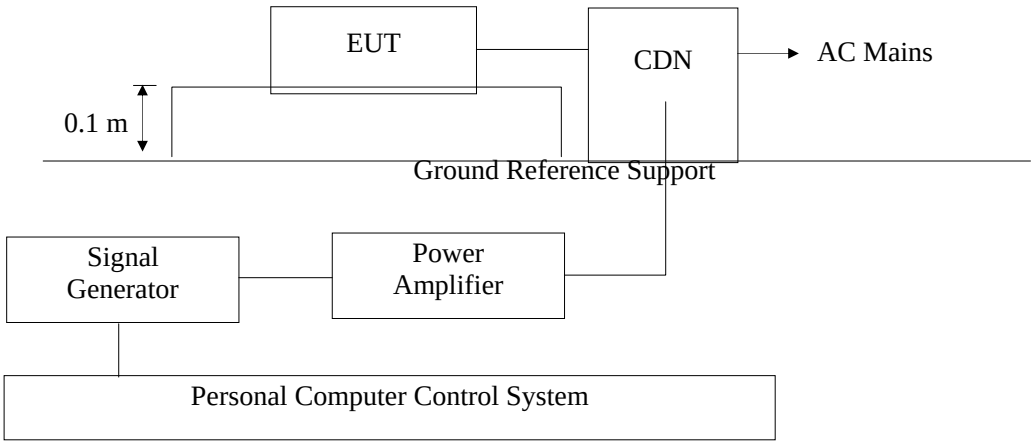

11.2. Test Standard

ETSI EN 301 489-3 V1.6.1:2013 (EN61000-4-6:2014)
Severity Level 2 at 3 V (rms), 0.15MHz ~ 80MHz

11.3.Severity Levels and Performance Criterion

11.3.1. Severity level

Level	Field Strength V/m
1.	1
2.	3
3.	10
X	Special

11.3.2. Performance criterion**: A**

11.4.EUT Configuration on Test

The configuration of EUT are listed in Section 3.4..

11.5.Operating Condition of EUT

Setup the EUT as shown in Section 12.1.. The operating condition of EUT are listed in section 3.5.

11.6.Test Procedure

1) Set up the EUT, CDN and test generators as shown on Section 12.1.2..
2) Let the EUT work in test mode and test it.
3) The EUT are placed on an insulating support 0.8m high above a ground reference plane. CDN (coupling and decoupling device) is placed on the ground plane about 0.3m from EUT. Cables between CDN and EUT are as short as possible, and their height above the ground reference plane shall be between 30 and 50 mm (where possible).
4) The disturbance signal described below is injected to EUT through CDN.
5) The EUT operates within its operational mode(s) under intended climatic conditions after power on.
6) The frequency range is swept from 150KHz to 80MHz using 3V signal level, and with the disturbance signal 80% amplitude modulated with a 1KHz sine wave.
7) The rate of sweep shall not exceed $1.5*10^{-3}$decades/s. Where the frequency is swept incrementally, the step size shall not exceed 1% of the start and thereafter 1% of the preceding frequency value.
8) Recording the EUT operating situation during compliance testing and decide the EUT immunity criterion.

11.7.Test Results

N/A.

Injected Currents Susceptibility Test Results

Shenzhen BST Technology Co., Ltd.

Date :09/21/2016

Applicant	: ENJOY TECHNOLOGY CO., LIMITED	Test Date	: Sep.21,2016
EUT	: AUDIENCE RESPONSE SYSTEM	Temperature	: 22 ℃
M/N	: 217	Humidity	: 50 %
Power Supply	: -	Test Mode	: -

Frequency Range (MHz)	Injected Position	Strength	Criterion	Result
0.15 ~ 20	AC Line	3V(rms), Unmodulated	A	-
20 ~ 80	AC Line	3V(rms), Unmodulated	A	-

12. VOLTAGE DIPS AND INTERRUPTIONS TEST

12.1. Block Diagram of Test Setup

12.1.1. Block Diagram of the EUT

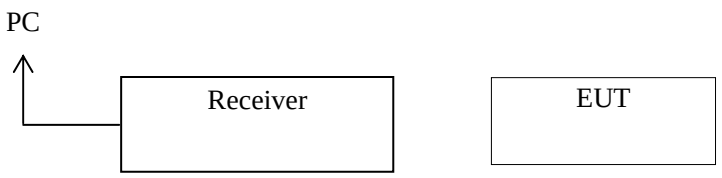

(EUT:AUDIENCE RESPONSE SYSTEM)

12.1.2. Voltage Dips and Interruptions Test Setup

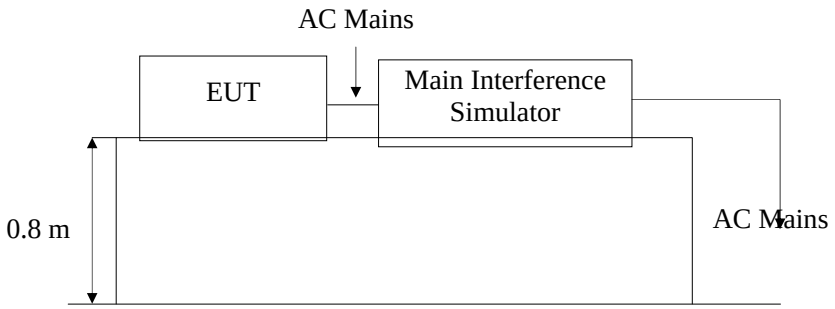

Remark: Combination wave generator and decoupling network are included in test generator.

12.2. Test Standard

ETSI EN 301 489-3 V1.6.1:2013 (EN61000-4-11: 2004)

12.3.Severity Levels and Performance Criterion

12.3.1. Severity level

Test Level %UT	Voltage dip and short interruptions %UT	Duration (in period)
0	100	250p
40	60	5p
70	30	0.5p

12.3.2. Performance criterion **: C & B**

12.4.EUT Configuration on Test

The configuration of EUT are listed in Section 3.4..

12.5.Operating Condition of EUT

12.5.1. Setup the EUT as shown in Section 14.1..

12.5.2. Turn on the power of all equipments.

12.5.3. Let the EUT work in test mode (SPEAKERS Playing) and test it.

12.6.Test Procedure

1) Set up the EUT and test generator as shown on Section 14.1.2.
2) The interruptions is introduced at selected phase angles with specified duration.
3) Record any degradation of performance.

12.7.Test Result

N/A.

Voltage Dips And Interruptions Test Results

Shenzhen BST Technology Co., Ltd

Date :09/21/2016

Applicant	: ENJOY TECHNOLOGY CO., LIMITED	Test Date	: Sep.21,2016
EUT	: AUDIENCE RESPONSE SYSTEM	Temperature	: 22 ℃
M/N	: 217	Humidity	: 50 %
Power Supply	: -	Test Mode	:

Test Level % U_T	Voltage Dips & Short Interruptions % U_T	Duration (in period)	Phase Angle	Criterion	Result
0	100	250P	0° ~360°	C	-
40	60	5P	0° ~360°	C	-
70	30	0.5P	0° ~360°	B	-

APPENDIX I
(Photos of the EUT)

Photo 1 General Appearance of the EUT

Photo 2 General Appearance of the EUT

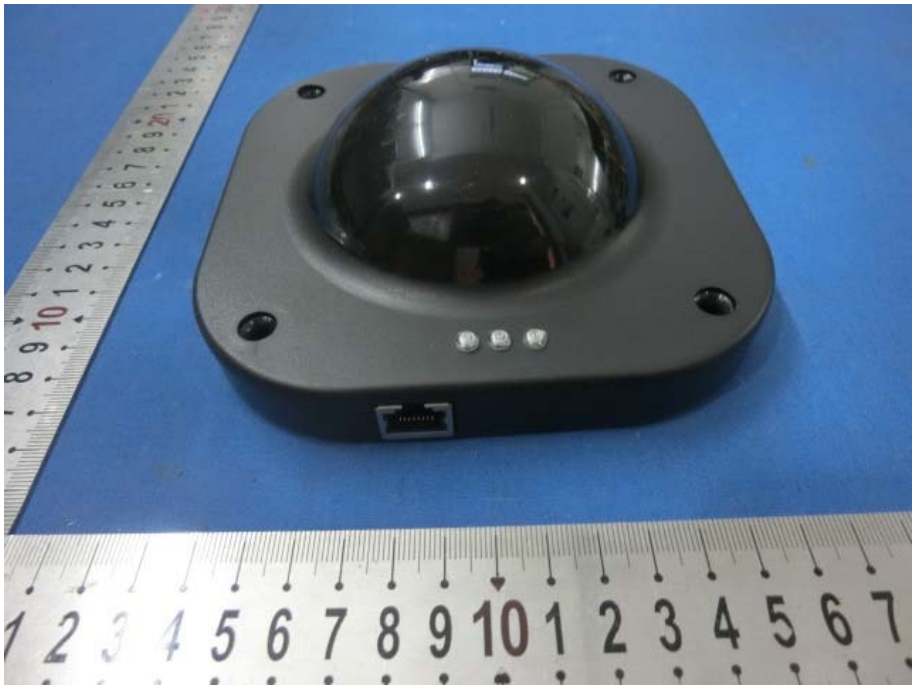

Photo 3 General Appearance of the EUT

Photo 4 General Appearance of the EUT

Photo 5 General Appearance of the EUT

Photo 6 General Appearance of the EUT

Photo 7 General Appearance of the EUT

Photo 8 General Appearance of the EUT
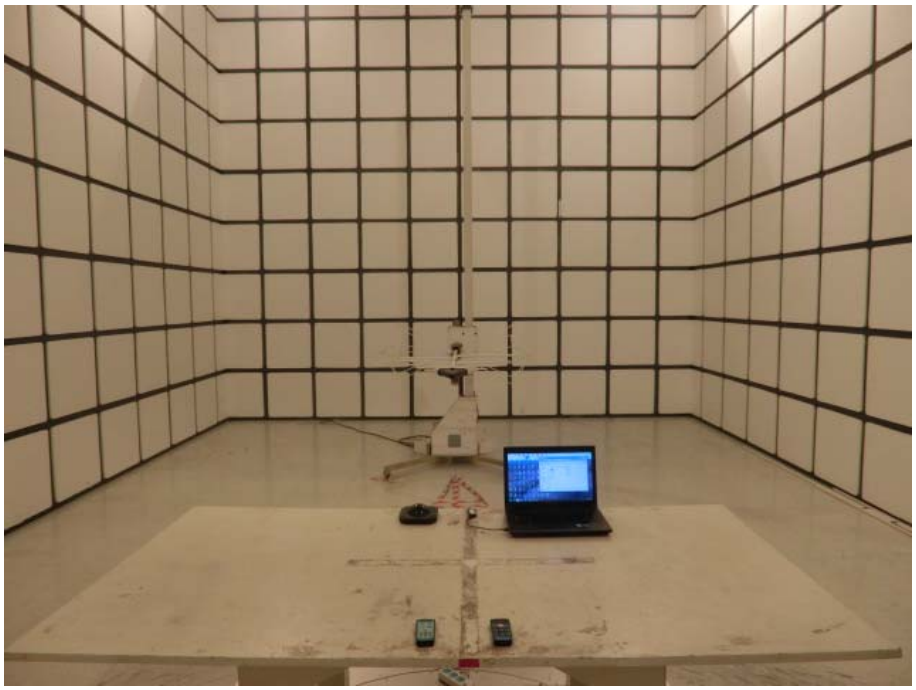
Photo 9 Test scene